Accredited Construction Details (Scotland) 2010

For the limitation of thermal bridging and air infiltration in low and medium rise domestic buildings

PART 3 - Timber Frame Junction Details

To be read in conjunction with ‘Introduction & Principles’

Document Version Control

Title: ACCREDITED CONSTRUCTION DETAILS (SCOTLAND) 2010 for the limitation of thermal bridging and air infiltration in low and medium rise domestic buildings – PART 3 – Timber Frame Junction Details

Purpose: The Accredited Construction Details document, which comprises of this section and five other parts, is produced to assist designers, verifiers and site operatives in the delivery of buildings which limit heat loss from linear thermal bridging and uncontrolled infiltration. This section gives examples of typical junctions and calculated psi values for timber frame construction.

Version	Date	Notes
1.0	October 2010	Initial issue of comprehensively updated document, in support of the 2010 revision to building regulations.

Table of contents

Construction details

The examples are shown with U-values which meet or improve upon those used for target setting within clause 6.2.1 of the Domestic Technical Handbook

Each detail section must be read in conjunction with the introductory section of the ACD document.

The example details are not intended as, and should not be used as, standard details for construction.

Instead, the principles and key element specification within an example should be applied by the designer where detailing of similar junction or construction situations. Illustration of these issues will assist the designer, verifier and builder to each assess whether both design proposals and work on site will deliver the intended levels of performance.

Use of cited psi values

The psi values cited for each example detail may be used in calculation of building heat loss where proposals by the designer address both the principles of construction set out in this part of the document and incorporate the key element specification issues identified in the relevant example within Parts 1 to 5.

Legend

Insulation zone

Air tightness barrier (note: this can also act as a vapour control layer)

Blue text — Guidance on thermal continuity

Red text — Guidance on air tightness

Values used in psi calculations

Material	λ-values used in calculations (W/mK)
Plasterboard	0.21
Insulation (generic)	0.04
Plywood sheathing	0.13
Brick outer leaf	0.77
Mineral wool insulation	0.044
Concrete block (dense) protected	1.13
Concrete block (lightweight, high strength)	0.19
Timber frame	0.13
Concrete floor beam	2.3
Concrete screed	1.15
Render (cement/sand)	1.0
Gypsum plaster (1000kg/m3)	0.4
Concrete roof tiles	1.5
EPDM membrane	0.25
Timber battens	0.13
Timber flooring	0.13
Chipboard	0.13
Floor joists	0.13
Aluminium	160
Steel	50
Stainless steel	17
Glass	1
Sarking felt	0.23
Insulation board	0.022

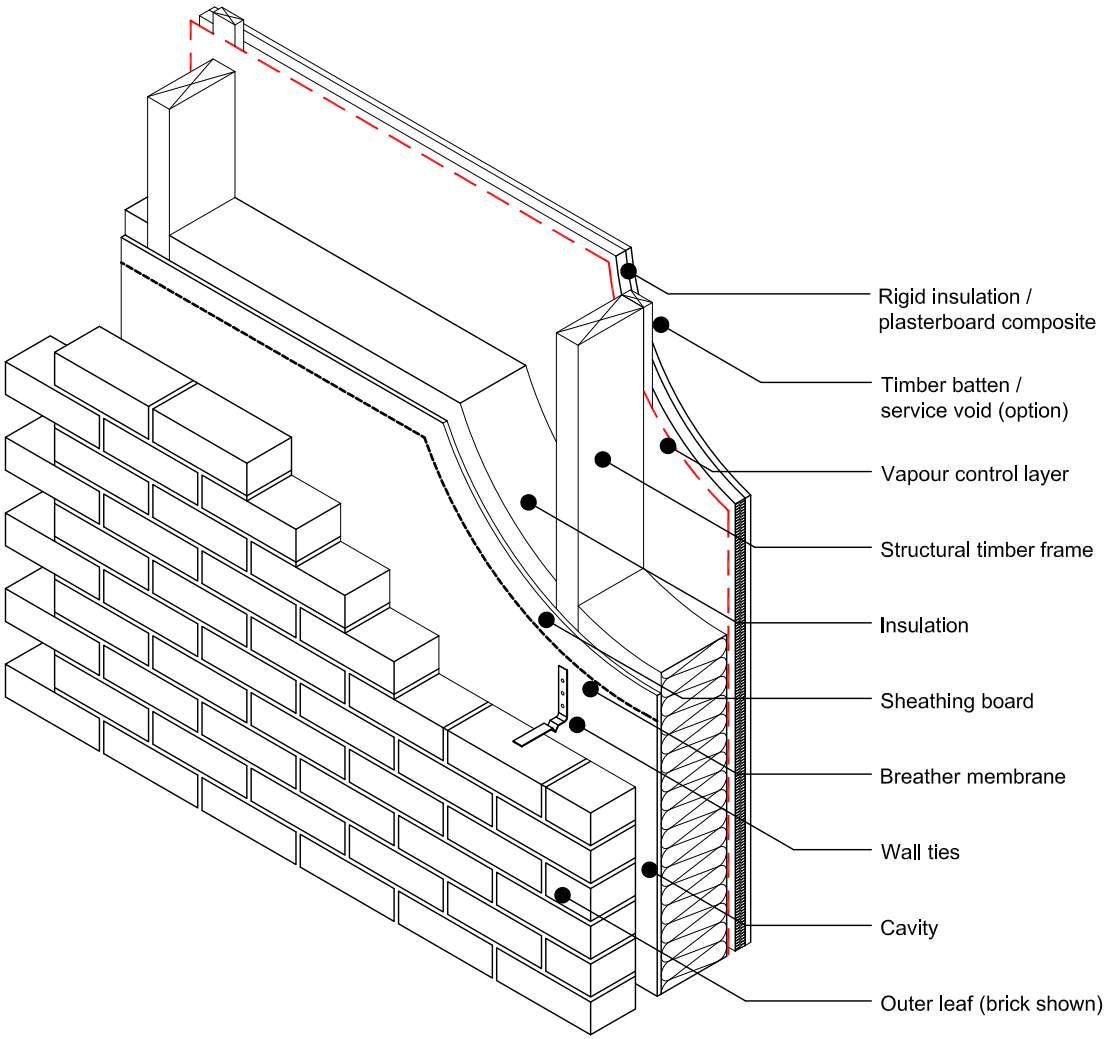

This example should be read in conjunction with the guidance in the introduction to this document. It illustrates the reduction of unwanted infiltration in buildings and provides a Psi value for this junction situation which can be used in calculation provided the principles outlined and any identified component specification are followed.

General guidance notes

Alternative constructions

1. The rigid insulation / plasterboard construction can be replaced other finishes but this will require that thicker insulation is used in the wall. Ensure that the thermal conductivity of this insulation is equal or less than that used in the cavity of the timber frame, to prevent interstitial condensation problems.
2. Different constructions can be used to provide an outer leaf but check that there is sufficient ventilation provision to prevent moisture from being trapped within the wall.

Sealing membrane junctions

3. All membranes should be taped, stapled or bedded in adhesive as identified by manufacturer. Repair all tears in membranes before commencing next stage of work.

Psi-value calculations

4. For details of all thermal conductivity values of materials used in the psi-value calculations, see Appendix B of the Introduction.

Timber Frame
Isometric cut-away view

Detail 3.00

Thermal continuity checklist

1. Ensure that insulation layers in roof are fitted perpendicularly, to cover junctions
2. Ensure that roof insulation fully laps timber frame insulation
3. Install cavity barrier at the top of the wall.

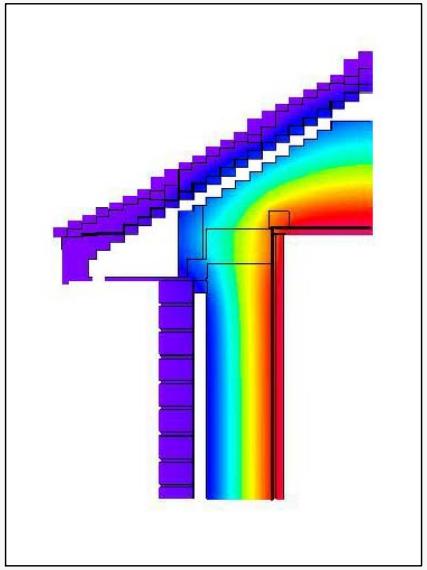

HEAT 2.7 software image of isotherms through junction detail.
For illustrative purposes only.

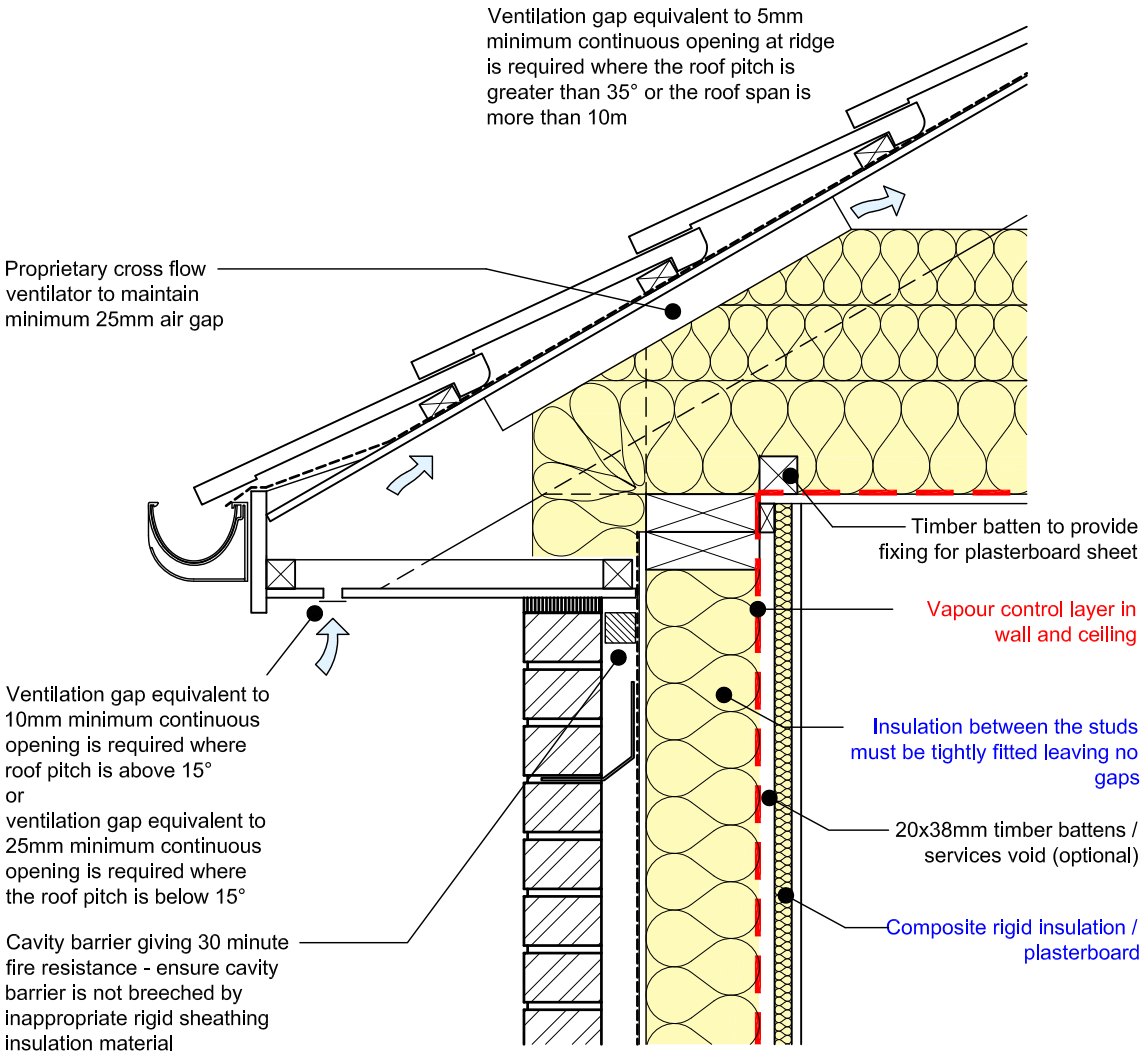

This example should be read in conjunction with the guidance in the introduction to this document. It illustrates the reduction of unwanted infiltration in buildings and provides a Psi value for this junction situation which can be used in calculation provided the principles outlined and any identified component specification are followed.

Air tightness checklist

1. Check that any air tightness barrier used in the wall overlaps and is robustly joined to the barrier in the ceiling

Design advice

Minimising condensation risk

1. Check ventilation paths are clear before installing insulation above the ceiling

Thermal Resistance of insulation used in details:

Wall - 3.182 (m²K)/W
Insulated plasterboard - 1.591(m²K)/W
Roof - 9.500(m²K)/W

Note: See detail numbers 3.02 and 3.21 for other junctions using this roof construction

Psi value = 0.0464W/mK

Timber Frame
Pitched Roof: Ventilated Roofspace - Eaves

Detail 3.01

Thermal continuity checklist

1. Ensure that insulation layers in roof are fitted perpendicularly, to cover junctions
2. Ensure that roof insulation butts against the timber sheathing in the wall
3. Install cavity barrier at the top of the wall.

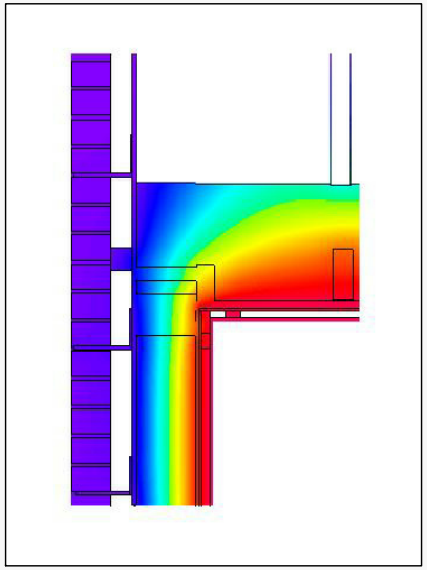

HEAT 2.7 software image of isotherms through junction detail.
For illustrative purposes only.

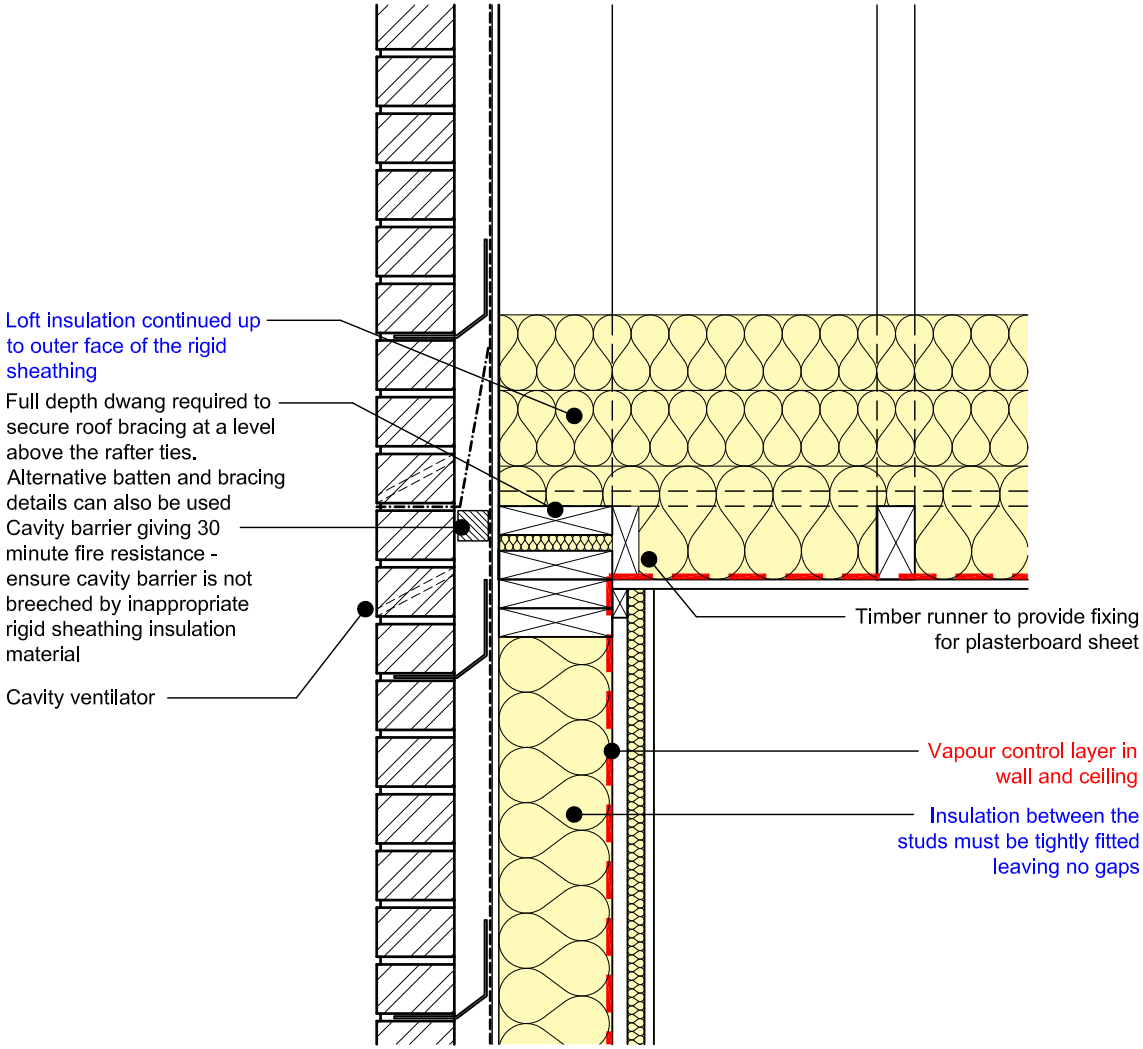

This example should be read in conjunction with the guidance in the introduction to this document. It illustrates the reduction of unwanted infiltration in buildings and provides a Psi value for this junction situation which can be used in calculation provided the principles outlined and any identified component specification are followed.

Air tightness checklist

1. Check that any air tightness barrier used in the wall overlaps and is robustly joined to the barrier in the ceiling

Design advice

Minimising condensation risk

1. Check ventilation paths are clear before installing insulation above the ceiling

Thermal Resistance of insulation used in details:

Wall - 3.182 (m²K)/W
Insulated plasterboard - 1.591(m²K)/W
Roof - 9.500(m²K)/W

Note: See detail numbers 3.01 and 3.21 for other junctions using this roof construction

Psi value = 0.1006W/mK

Timber Frame
Pitched Roof: Ventilated Roofspace - Gable

Detail 3.02

Thermal continuity checklist

1. Ensure that insulation is fitted tightly within the timber frame
2. Ensure that insulation layers in roof are fitted perpendicularly to cover junctions
3. Install cavity barrier at the top of the wall.

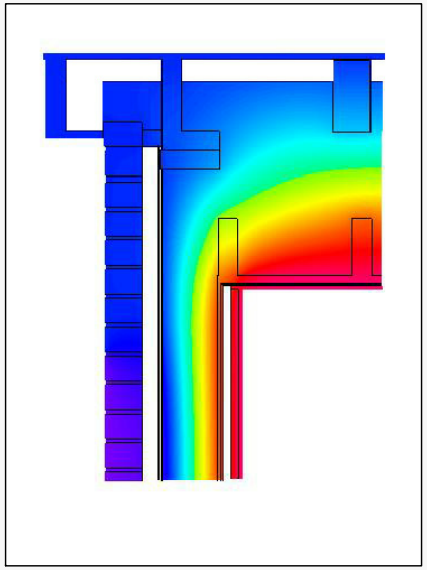

HEAT 2.7 software image of isotherms through junction detail.
For illustrative purposes only.

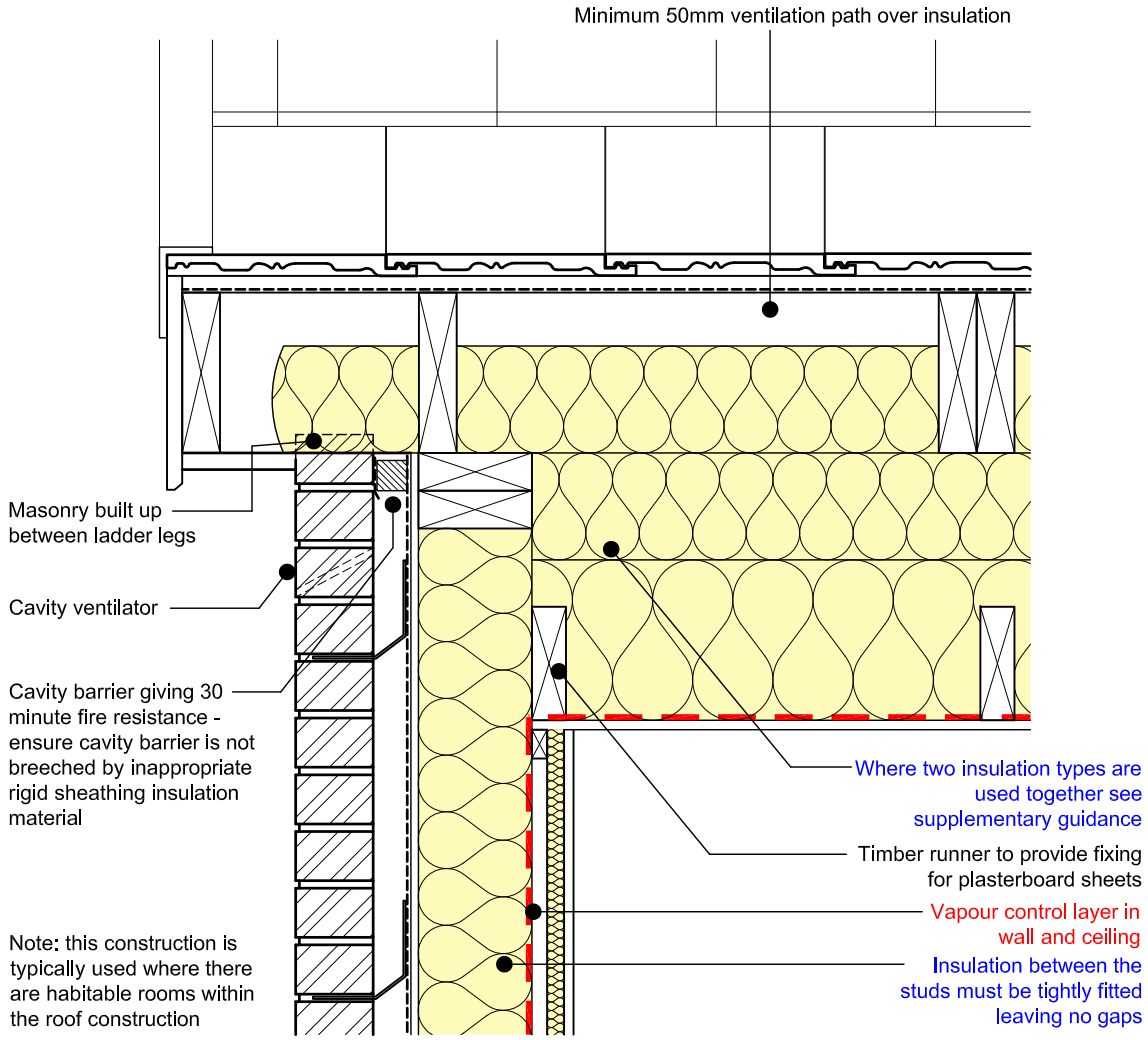

This example should be read in conjunction with the guidance in the introduction to this document. It illustrates the reduction of unwanted infiltration in buildings and provides a Psi value for this junction situation which can be used in calculation provided the principles outlined and any identified component specification are followed.

Air tightness checklist

1. Check that any air tightness barrier used in the wall overlaps with the barrier in the ceiling

Design advice

Minimising condensation risk

1. Check ventilation paths are clear before installing insulation above the ceiling

Thermal Resistance of insulation used in details:

Wall - 3.182 (m²K)/W
Insulated plasterboard - 1.591(m²K)/W
Roof - 9.500(m²K)/W

Note: See detail numbers 3.04, 3.05 and 3.22 for other junctions using this roof construction

Psi value = 0.0472W/mK

Timber Frame
Pitched Roof: Ventilated Rafter Void - Gable

Detail 3.03

Thermal continuity checklist

1. Ensure that insulation layers in roof are fitted perpendicularly, to cover junctions
2. Ensure that roof insulation overlaps with the top of the timber frame wall, with minimum 50mm overlap at the narrowest point
3. Install cavity barrier at the top of the wall

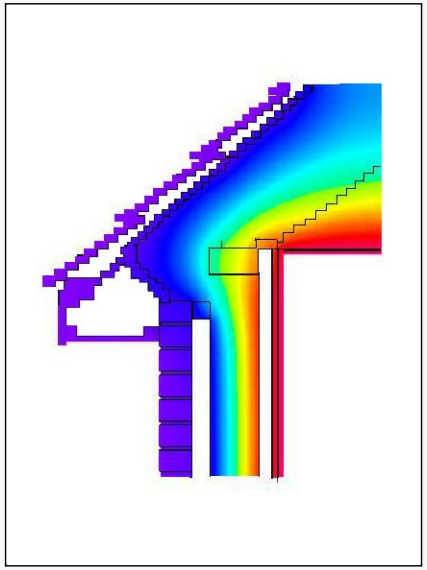

HEAT 2.7 software image of isotherms through junction detail.
For illustrative purposes only.

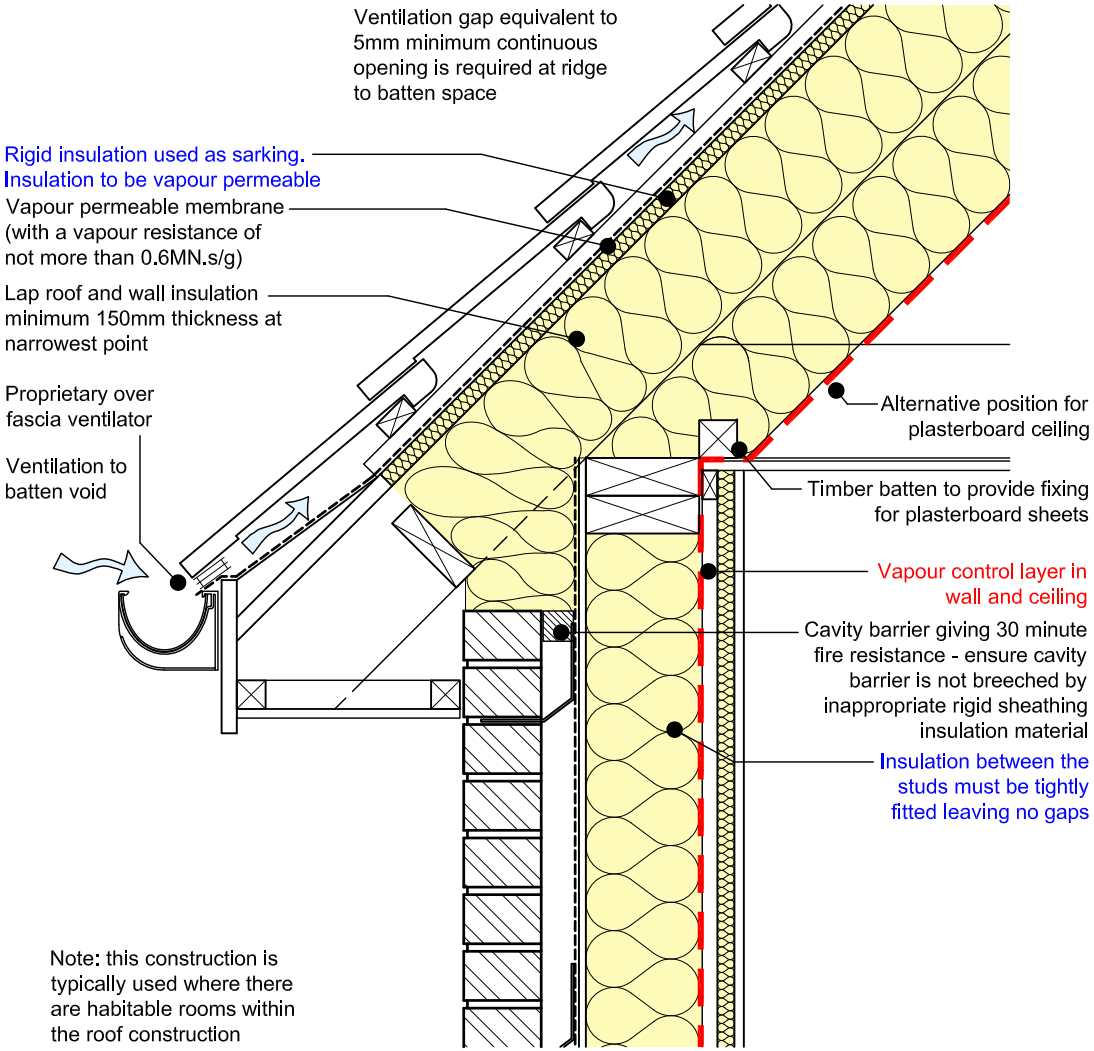

This example should be read in conjunction with the guidance in the introduction to this document. It illustrates the reduction of unwanted infiltration in buildings and provides a Psi value for this junction situation which can be used in calculation provided the principles outlined and any identified component specification are followed.

Air tightness checklist

1. Check that any air tightness barrier used in the wall overlaps with the barrier in the ceiling

Design advice

Minimising condensation risk

1. Check ventilation paths are clear before installing insulation above the ceiling

Thermal Resistance of insulation used in details:

Wall - 3.182 (m²K)/W
Insulated plasterboard - 1.591(m²K)/W
Roof - 9.500(m²K)/W

Note: See detail numbers 3.03, 3.05 and 3.22 for other junctions using this roof construction

Psi value = 0.0284W/mK

Timber Frame
Pitched Roof: Ventilated Batten Void (warm roof) - Eaves

Detail 3.04

Thermal continuity checklist

1. Ensure that insulation layers are fitted perpendicularly, to cover junctions
2. Ensure that roof insulation fully laps timber frame insulation
3. Install cavity barrier at the top of the wall.

Note: this construction is typically used where there are habitable rooms within the roof construction

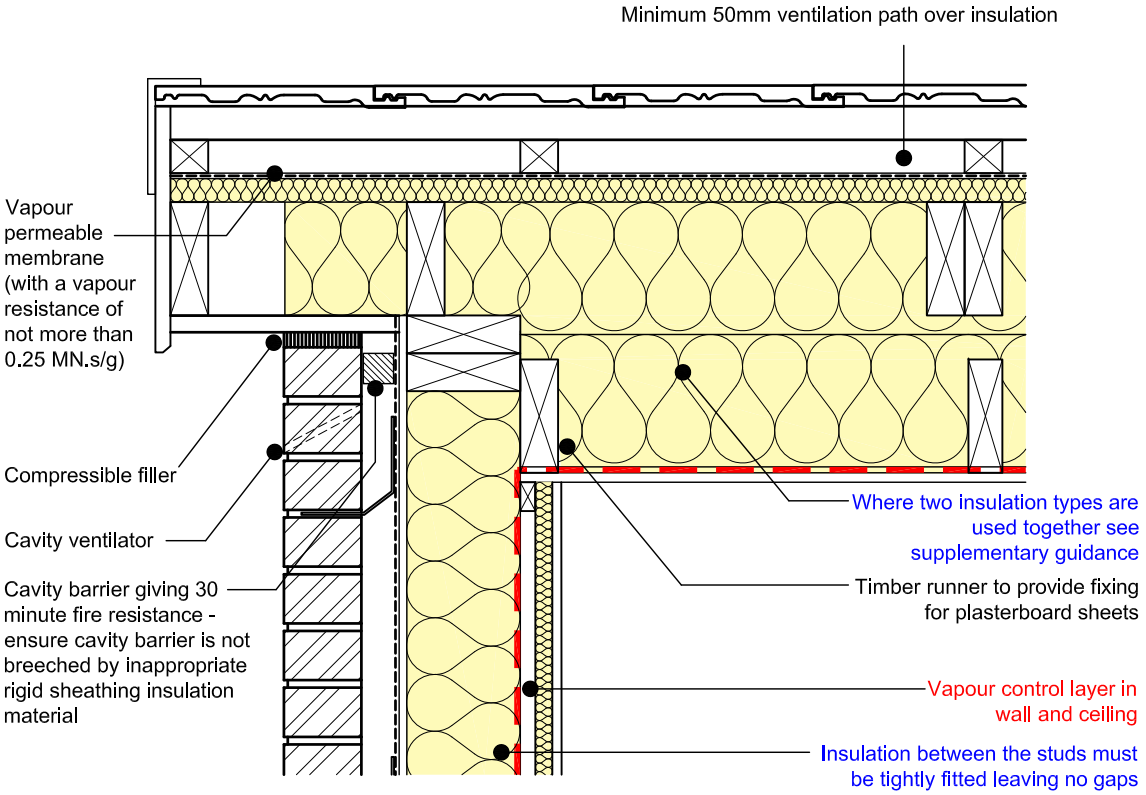

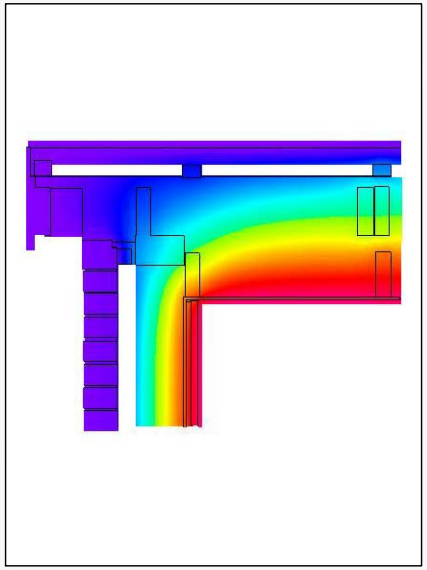

HEAT 2.7 software image of isotherms through junction detail.
For illustrative purposes only.

This example should be read in conjunction with the guidance in the introduction to this document. It illustrates the reduction of unwanted infiltration in buildings and provides a Psi value for this junction situation which can be used in calculation provided the principles outlined and any identified component specification are followed.

Air tightness checklist

1. Check that any air tightness barrier used in the wall overlaps with the barrier in the ceiling

Design advice

Minimising condensation risk

1. Check ventilation paths are clear before installing insulation above the ceiling

Thermal Resistance of insulation used in details:

Wall - 3.182 (m²K)/W
Insulated plasterboard - 1.591(m²K)/W
Roof - 9.500(m²K)/W

Note: See detail numbers 3.03, 3.04 and 3.22 for other junctions using this roof construction

Psi value = 0.0431W/mK

Timber Frame
Pitched Roof: Ventilated Batten Void (warm roof) - Gable

Detail 3.05

Thermal continuity checklist

1. Ensure that insulation layers in roof are fitted perpendicularly, to cover junctions
2. Ensure that roof insulation fully laps timber frame insulation
3. Install cavity barrier at the top of the wall.

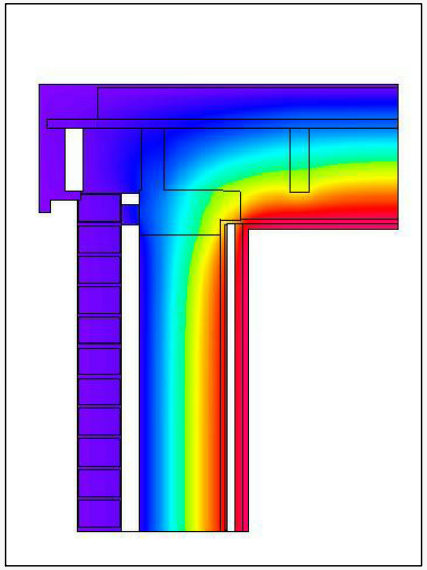

HEAT 2.7 software image of isotherms through junction detail.
For illustrative purposes only.

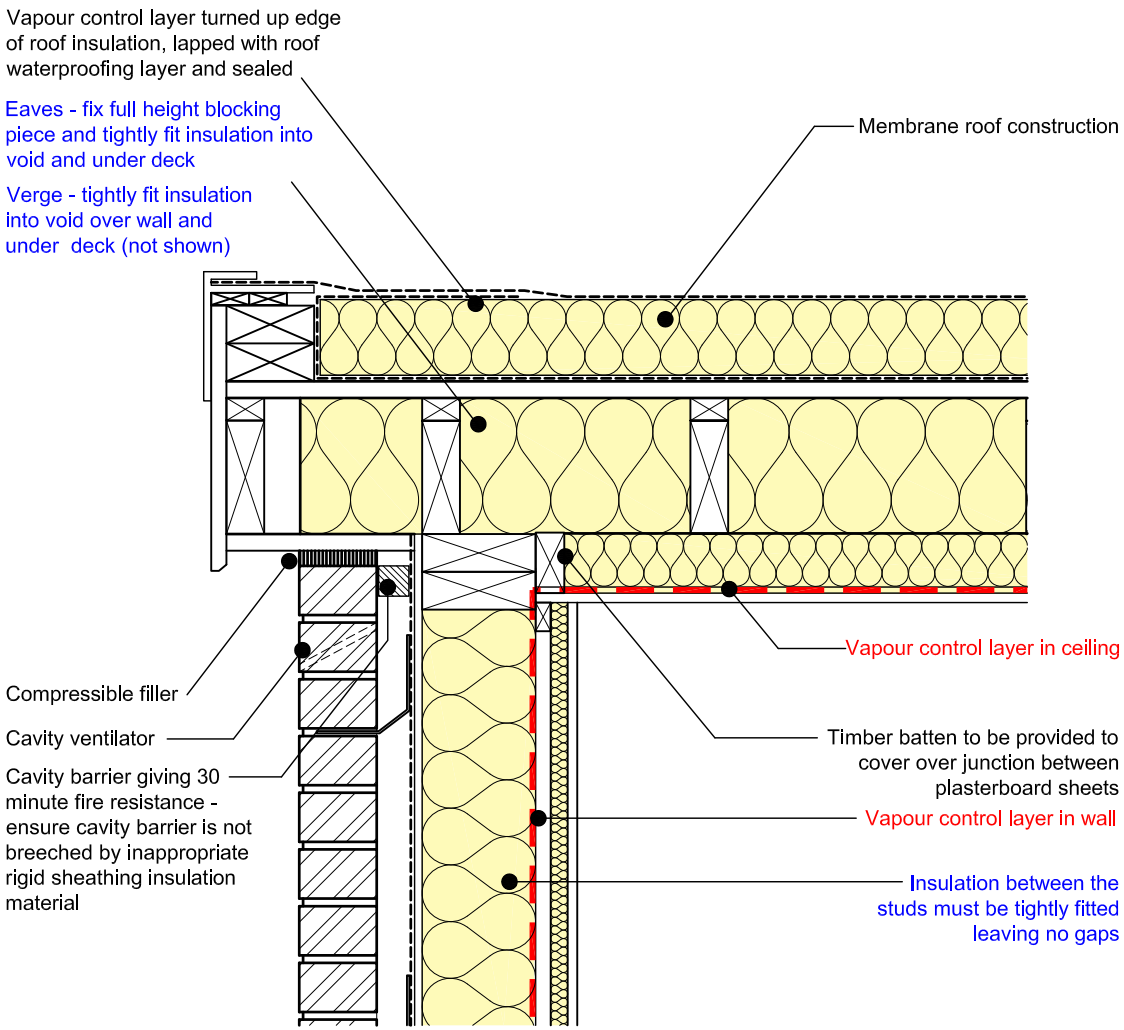

This example should be read in conjunction with the guidance in the introduction to this document. It illustrates the reduction of unwanted infiltration in buildings and provides a Psi value for this junction situation which can be used in calculation provided the principles outlined and any identified component specification are followed.

Air tightness checklist

1. Check that any air tightness barrier used in the wall overlaps with the barrier in the ceiling

Design advice

Minimising condensation risk

1. Check ventilation paths are clear before installing insulation above the ceiling
2. A vapour barrier is required at ceiling level, to prevent moisture from entering into the roof construction
3. The option shown here includes a vapour control layer and insulation as part of a membrane roof construction. Similar details could be used for a profiled metal decking roof but consult with manufacturer regarding ventilation requirements.

Thermal Resistance of insulation used in details:

Wall - 3.182 (m²K)/W
Insulated plasterboard - 1.591(m²K)/W
Roof - 9.500(m²K)/W

Psi value = 0.0536W/mK

Timber Frame
Timber Flat Roof

Detail 3.06

Thermal continuity checklist

1. Ensure that insulation layers in roof are fitted perpendicularly, to cover junctions
2. Ensure that roof insulation butts against the timber wall sheathing with a minimum of 50mm overlap at narrowest point
3. Install cavity barrier at the top of the wall

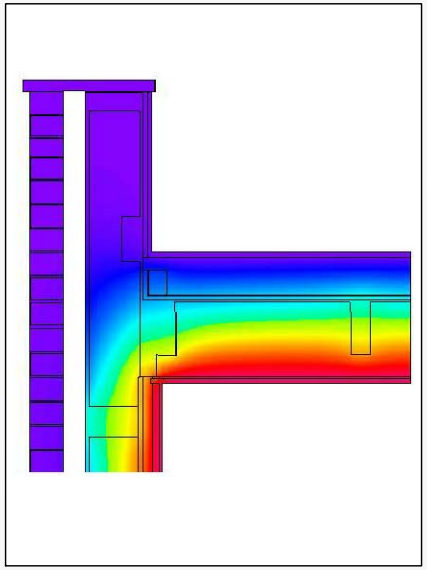

HEAT 2.7 software image of isotherms through junction detail.
For illustrative purposes only.

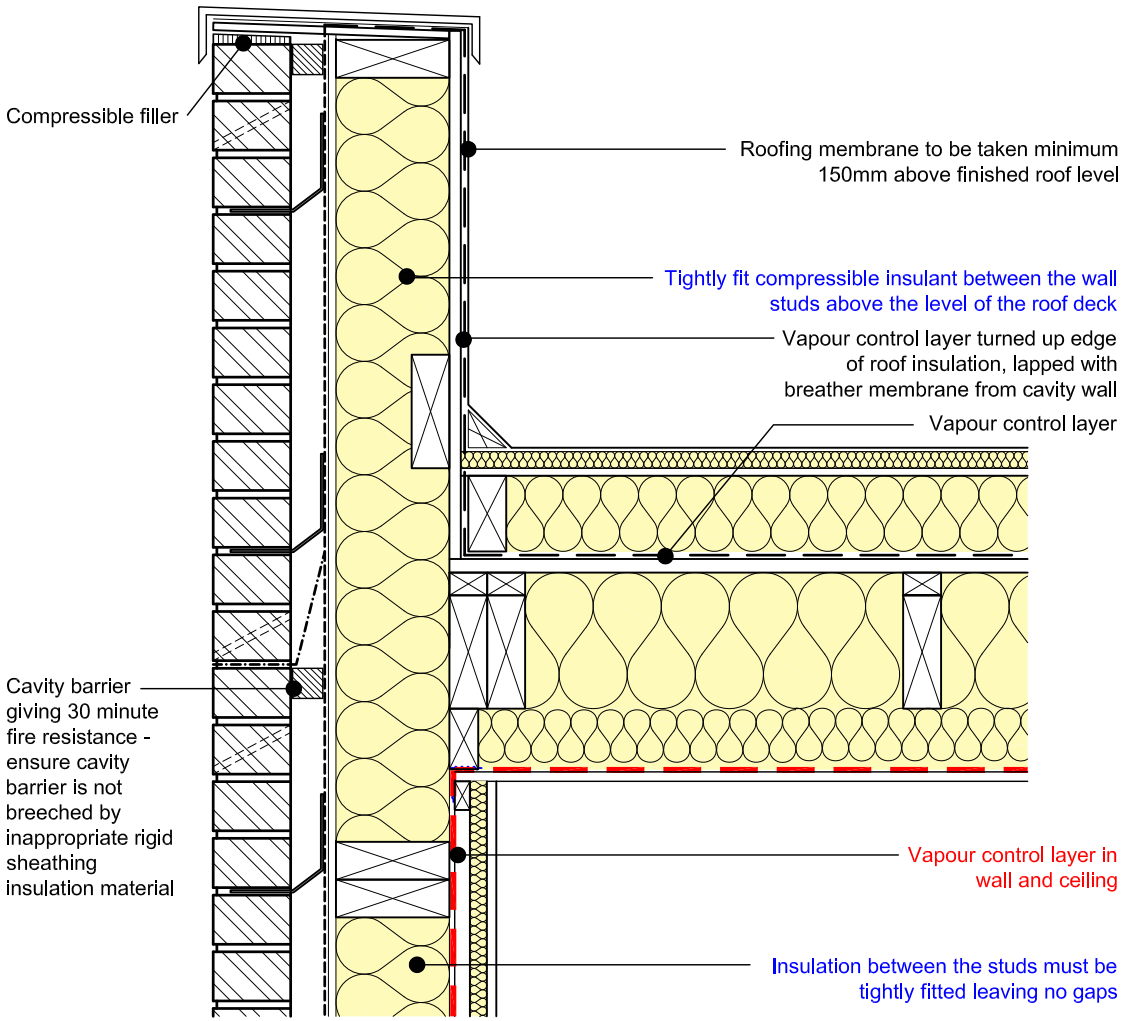

This example should be read in conjunction with the guidance in the introduction to this document. It illustrates the reduction of unwanted infiltration in buildings and provides a Psi value for this junction situation which can be used in calculation provided the principles outlined and any identified component specification are followed.

Air tightness checklist

1. Check that any air tightness barrier used in the wall overlaps with the barrier in the ceiling

Design advice

Minimising condensation risk

1. Check ventilation paths are clear before installing insulation above the ceiling
2. A vapour barrier is required at ceiling level, to prevent moisture from entering into the roof construction
3. The option shown here includes a vapour control layer and insulation as part of a membrane roof construction. Similar details could be used for a profiled metal decking roof but consult with manufacturer regarding ventilation requirements.

Thermal Resistance of insulation used in details:

Wall - 3.182 (m²K)/W
Insulated plasterboard - 1.591(m²K)/W
Roof - 9.500(m²K)/W

Psi value = 0.0299W/mK

Timber Frame
Timber Flat Roof with Parapet

Detail 3.07

Thermal continuity checklist

1. Check that there is no debris in the cavity
2. Install cavity barrier around opening

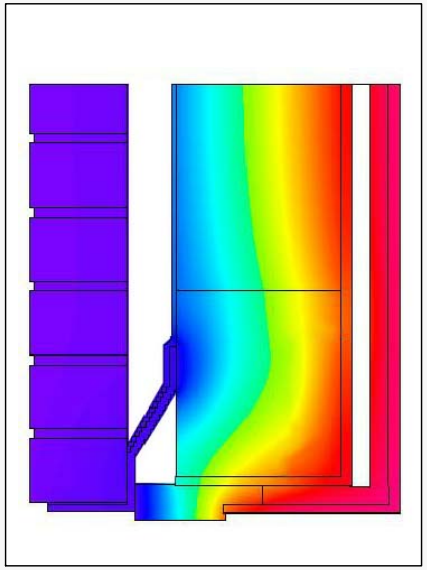

HEAT 2.7 software image of isotherms through junction detail.
For illustrative purposes only.

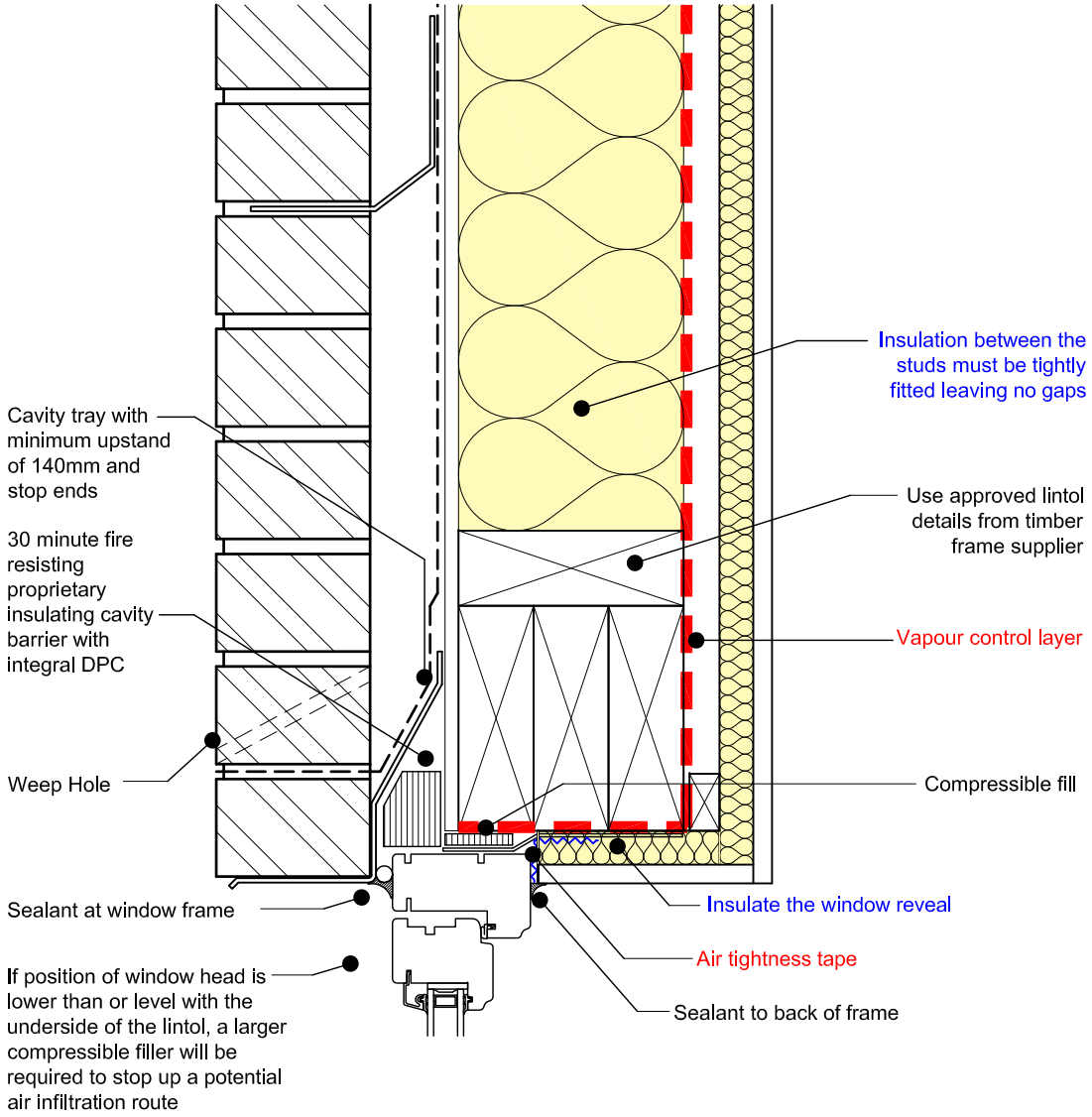

This example should be read in conjunction with the guidance in the introduction to this document. It illustrates the reduction of unwanted infiltration in buildings and provides a Psi value for this junction situation which can be used in calculation provided the principles outlined and any identified component specification are followed.

Air tightness checklist

1. Install window to overlap with outer leaf of wall finish.

Alternative:

If window lines through with the bottom of the opening in the external finish, some means of preventing a direct line of air infiltration will be required

2. Install air tightness seal between the inside face of the window and the structural finish of the window opening

Design advice

Minimising condensation risk

1. Alternative internal finish at window reveal - use insulation backed plasterboard

Thermal Resistance of insulation used in details:

Wall - 3.182 (m²K)/W
Insulated plasterboard - 1.591(m²K)/W

Psi value = 0.121W/mK

Timber Frame
Lintel at Window Head

Detail 3.08

Thermal continuity checklist

1. Check that there is no debris in the cavity
2. Install cavity barrier around opening

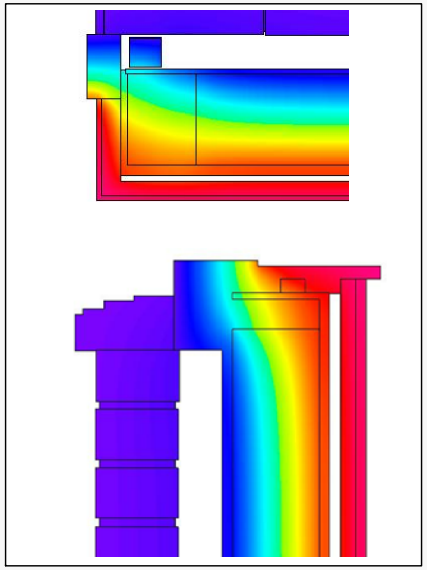

HEAT 2.7 software image of isotherms through junction detail.
For illustrative purposes only.

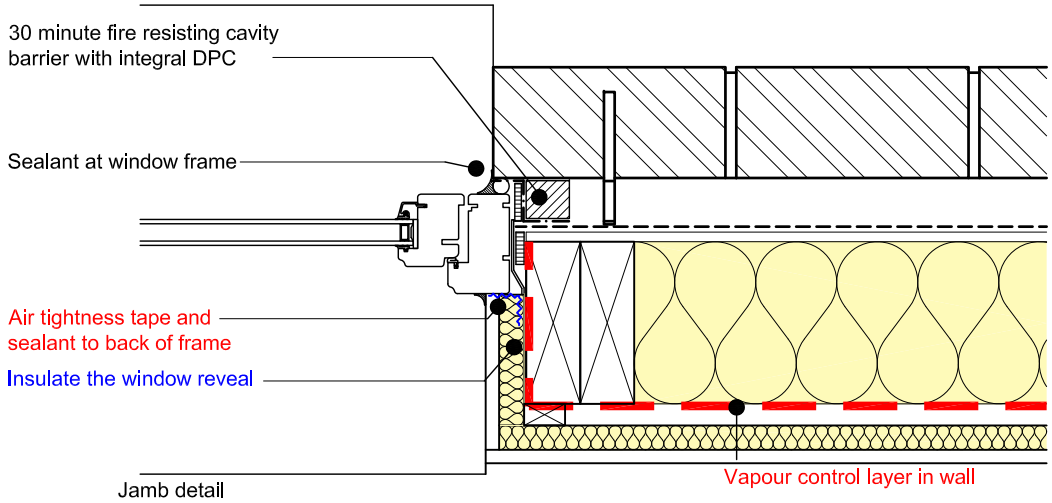

Jamb detail

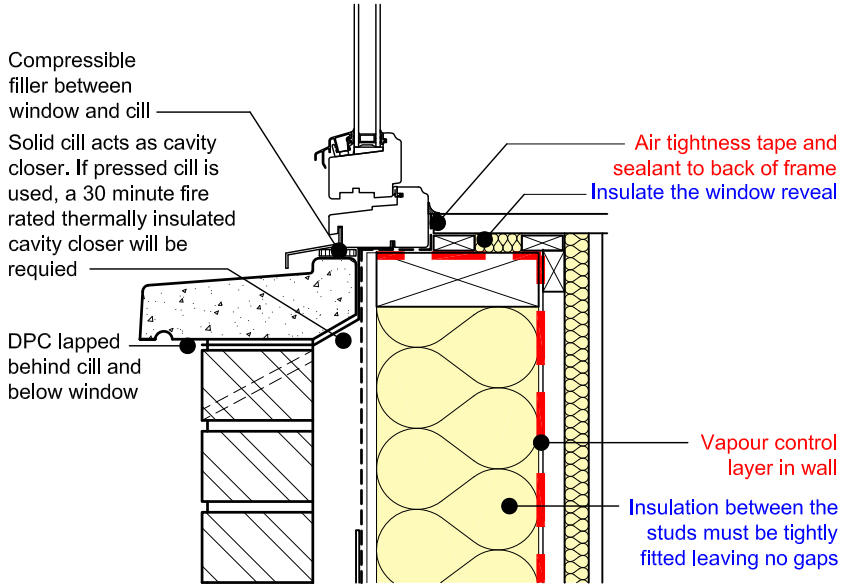

Cill detail

This example should be read in conjunction with the guidance in the introduction to this document. It illustrates the reduction of unwanted infiltration in buildings and provides a Psi value for this junction situation which can be used in calculation provided the principles outlined and any identified component specification are followed.

Air tightness checklist

1. Install window to overlap with outer leaf of wall finish.

Alternative:

If window lines through with the bottom of the opening in the external finish, some means of preventing a direct line of air infiltration will be required

2. Install air tightness seal between the inside face of the window and the structural finish of the window opening

Design advice

Minimising condensation risk

1. Alternative internal finish at window reveal - use insulation backed plasterboard

Thermal Resistance of insulation used in details:

Wall - 3.182 (m²K)/W
Insulated plasterboard - 1.591(m²K)/W

Psi value (jamb)=0.0328W/mK
Psi value (cill) = 0.0934W/mK

Timber Frame
Windows and Doors - Jambs and Cills

Detail 3.09

Thermal continuity checklist

1. Use a lightweight loadbearing concrete block where the wall abuts the concrete slab to minimise thermal bridging
2. Use a perimeter strip of insulation where the concrete slab abuts the concrete blockwork wall

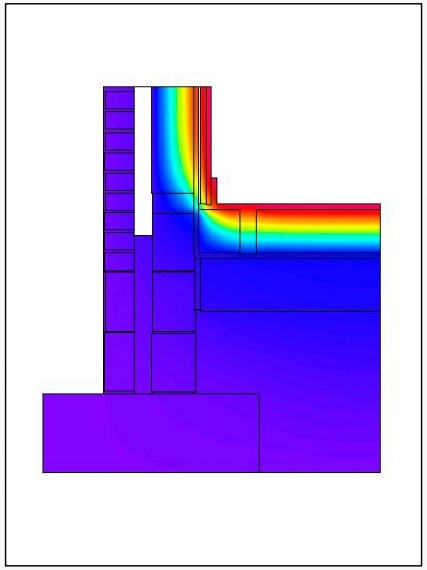

HEAT 2.7 software image of isotherms through junction detail.
For illustrative purposes only.

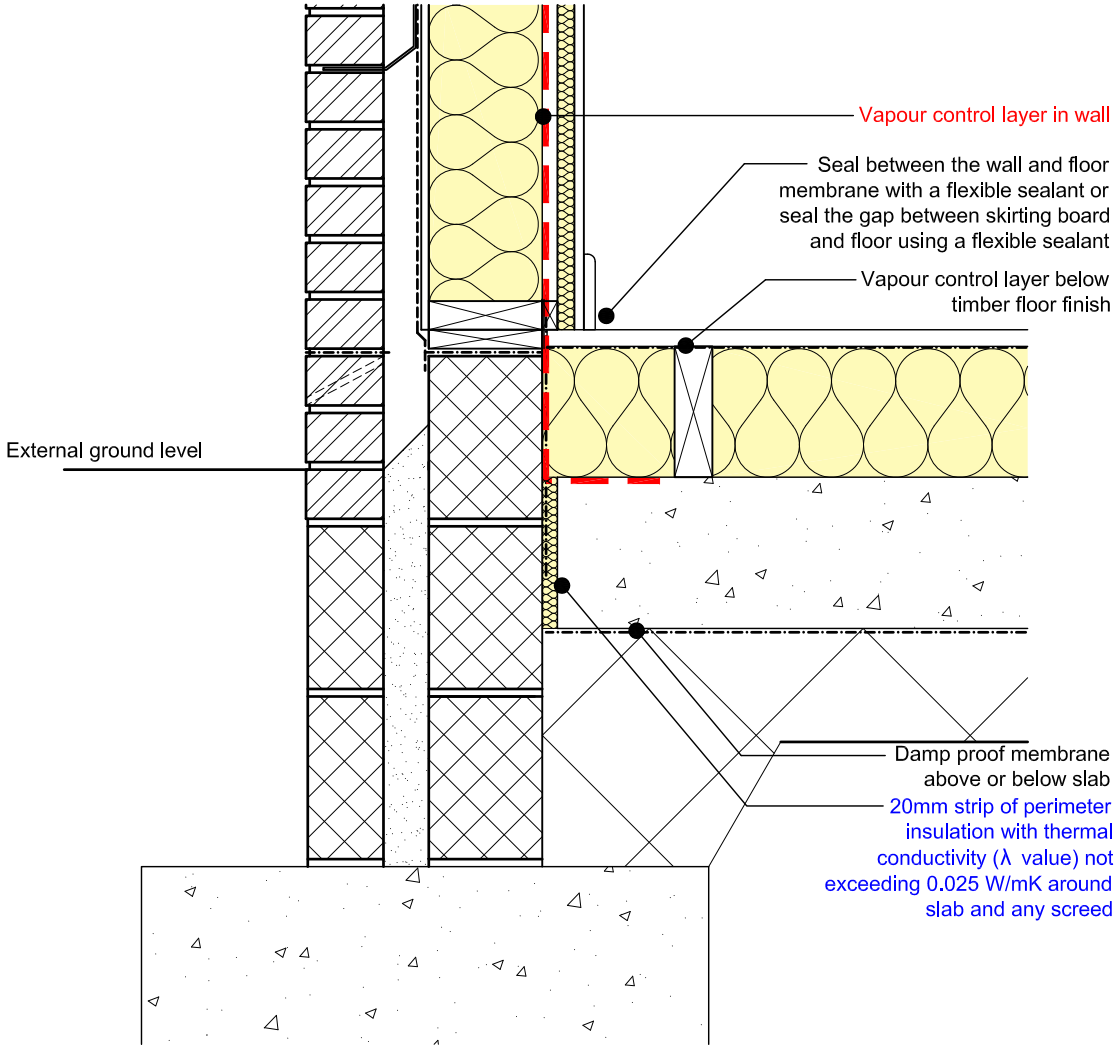

This example should be read in conjunction with the guidance in the introduction to this document. It illustrates the reduction of unwanted infiltration in buildings and provides a Psi value for this junction situation which can be used in calculation provided the principles outlined and any identified component specification are followed.

Air tightness checklist

1. Ensure that any air tightness barrier used in the wall overlaps onto the floor slab

Design advice

Minimising condensation risk

1. Check that concrete slab is level and clear of debris before fitting the insulation at floor level
2. If a screed finish is used instead of a timber floor, use a strip of perimeter insulation with a minimum R value of 0.75 m²/KW for the depth of the screed

Alternative detail

3. Using lightweight blockwork (e.g. with λ value of 0.19W/mK) to improve the thermal performance at the junction where the external wall and ground floor constructions meet will change the psi value

Thermal Resistance of insulation used in details:

Wall - 3.182 (m²K)/W
Insulated plasterboard - 1.591(m²K)/W
Floor - 3.864(m²K)/W

Psi value = 0.1145W/mK

Timber Frame
Ground Bearing Floor: Insulation Above Slab

Detail 3.10

Thermal continuity checklist

1. Use a lightweight loadbearing concrete block where the wall abuts the concrete slab to minimise thermal bridging
2. Use a perimeter strip of insulation where the concrete slab abuts the concrete blockwork wall

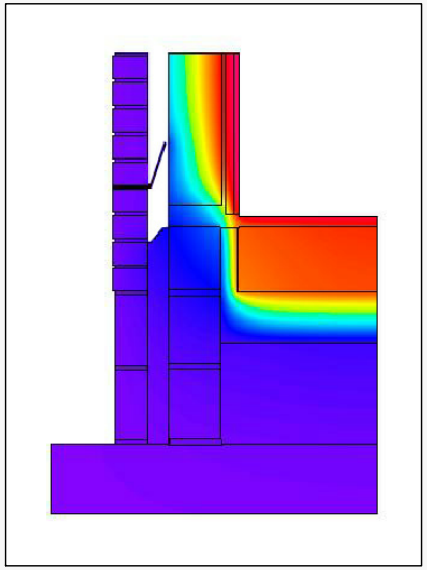

HEAT 2.7 software image of isotherms through junction detail.
For illustrative purposes only.

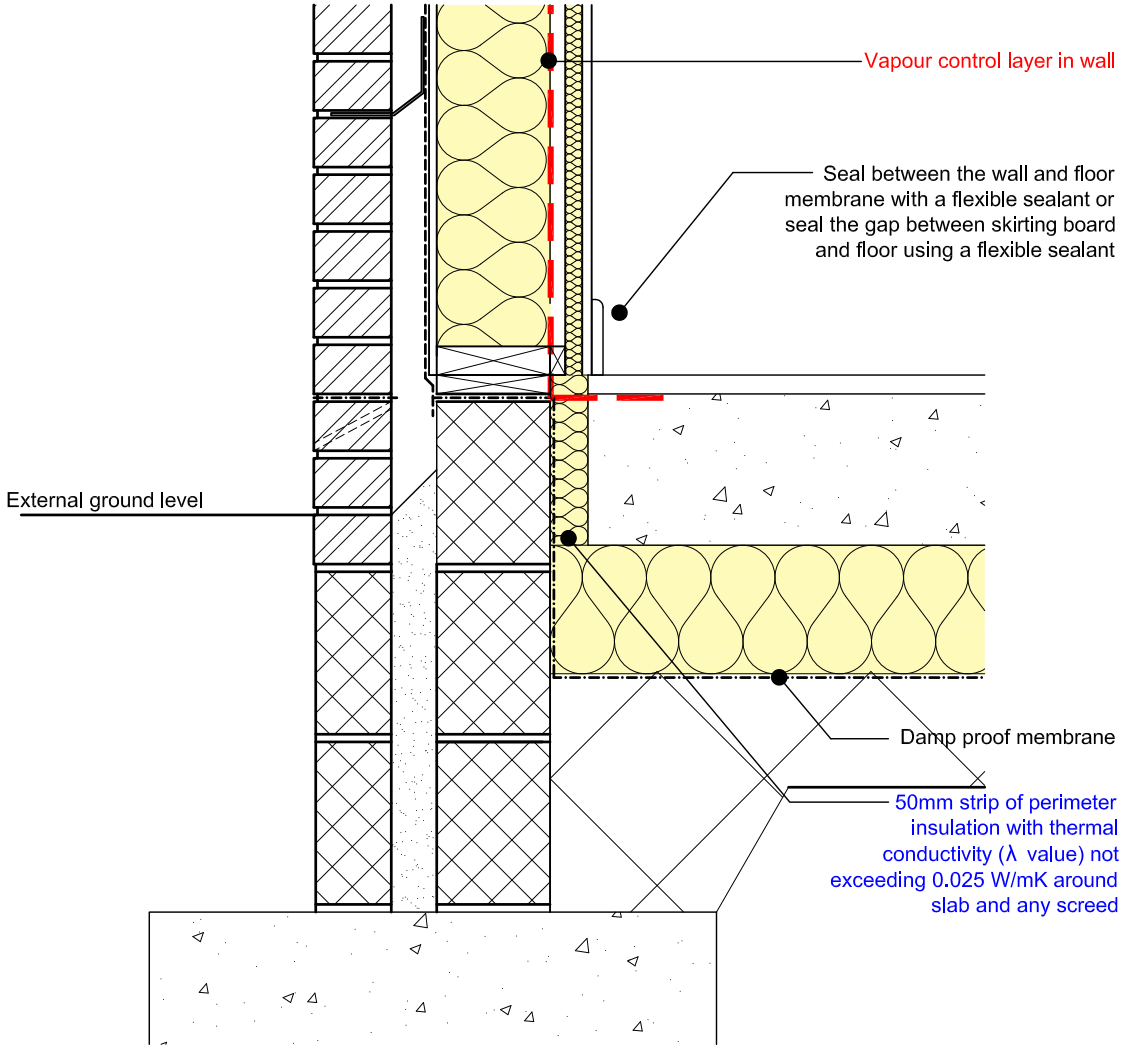

This example should be read in conjunction with the guidance in the introduction to this document. It illustrates the reduction of unwanted infiltration in buildings and provides a Psi value for this junction situation which can be used in calculation provided the principles outlined and any identified component specification are followed.

Air tightness checklist

1. Check that any air tightness barrier used in the wall overlaps onto the floor slab

Design advice

Minimising condensation risk

1. If a screed finish is used instead of a timber floor, use a strip of perimeter insulation with a minimum R value of 0.75 m²/KW for the depth of the screed

Alternative detail

2. Using lightweight blockwork (e.g. with λ value of 0.19W/mK) to improve the thermal performance at the junction where the external wall and ground floor constructions meet will change the psi value

Thermal Resistance of insulation used in details:

Wall - 3.182 (m²K)/W
Insulated plasterboard - 1.591(m²K)/W
Floor - 3.864(m²K)/W

Psi value = 0.1733W/mK

Timber Frame
Ground Bearing Floor: Insulation Below Slab

Detail 3.11

Thermal continuity checklist

1. Ensure that floor insulation butts against the insulation in the external wall

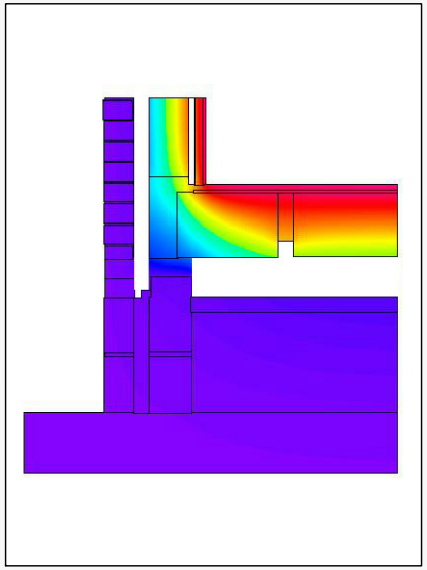

HEAT 2.7 software image of isotherms through junction detail.
For illustrative purposes only.

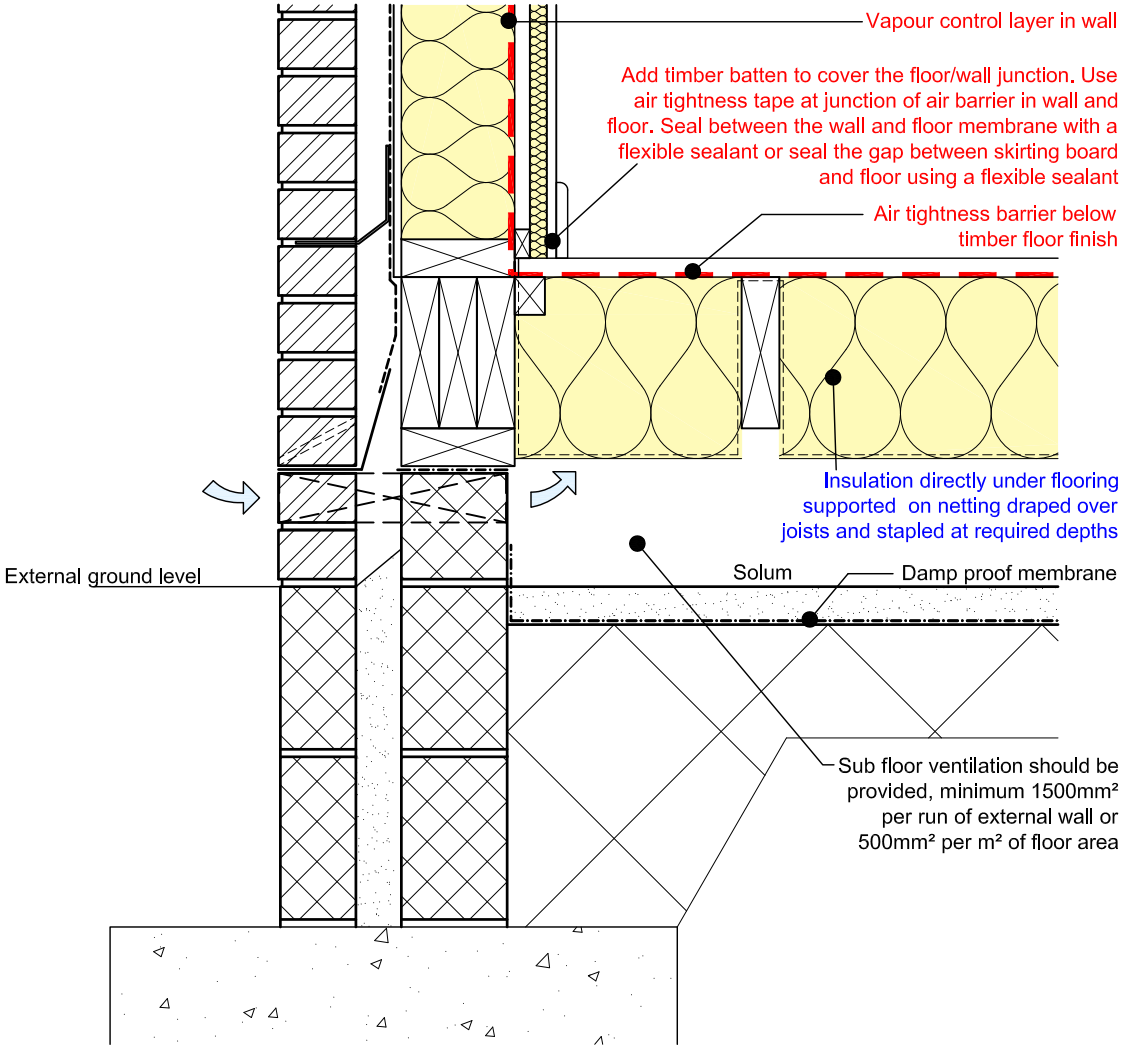

This example should be read in conjunction with the guidance in the introduction to this document. It illustrates the reduction of unwanted infiltration in buildings and provides a Psi value for this junction situation which can be used in calculation provided the principles outlined and any identified component specification are followed.

Air tightness checklist

1. Check that any air tightness barrier used in the wall overlaps with the barrier in the floor

Design advice

Minimising condensation risk

1. Check that all ventilation paths are clear before installing the floor insulation

Alternative detail

2. Using lightweight blockwork (e.g. with λ value of 0.19W/mK) to improve thermal performance at the junction where the external wall and ground floor constructions meet will change the psi value
3. If there are concerns about damaging the air tightness membrane in the floor finish during construction, an additional services void can be created using timber battens on top of the floor joists

Thermal Resistance of insulation used in details:

Wall - 3.182 (m²K)/W
Insulated plasterboard - 1.591(m²K)/W
Floor - 5.455(m²K)/W

Psi value = 0.0423W/mK

Timber Frame
Timber Suspended Ground Floor

Detail 3.12

Thermal continuity checklist

1. Check that there is no debris in the cavity
2. Install cavity barrier at junction of wall

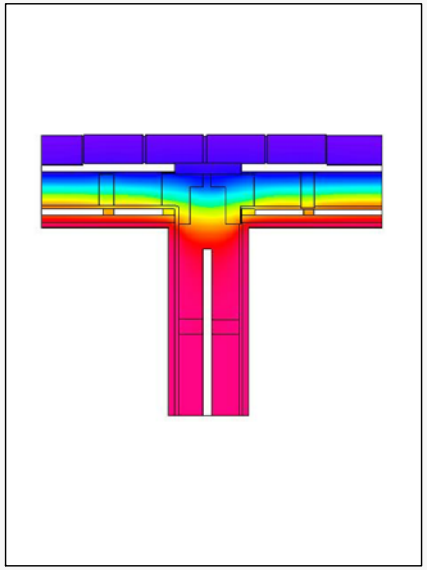

HEAT 2.7 software image of isotherms through junction detail.
For illustrative purposes only.

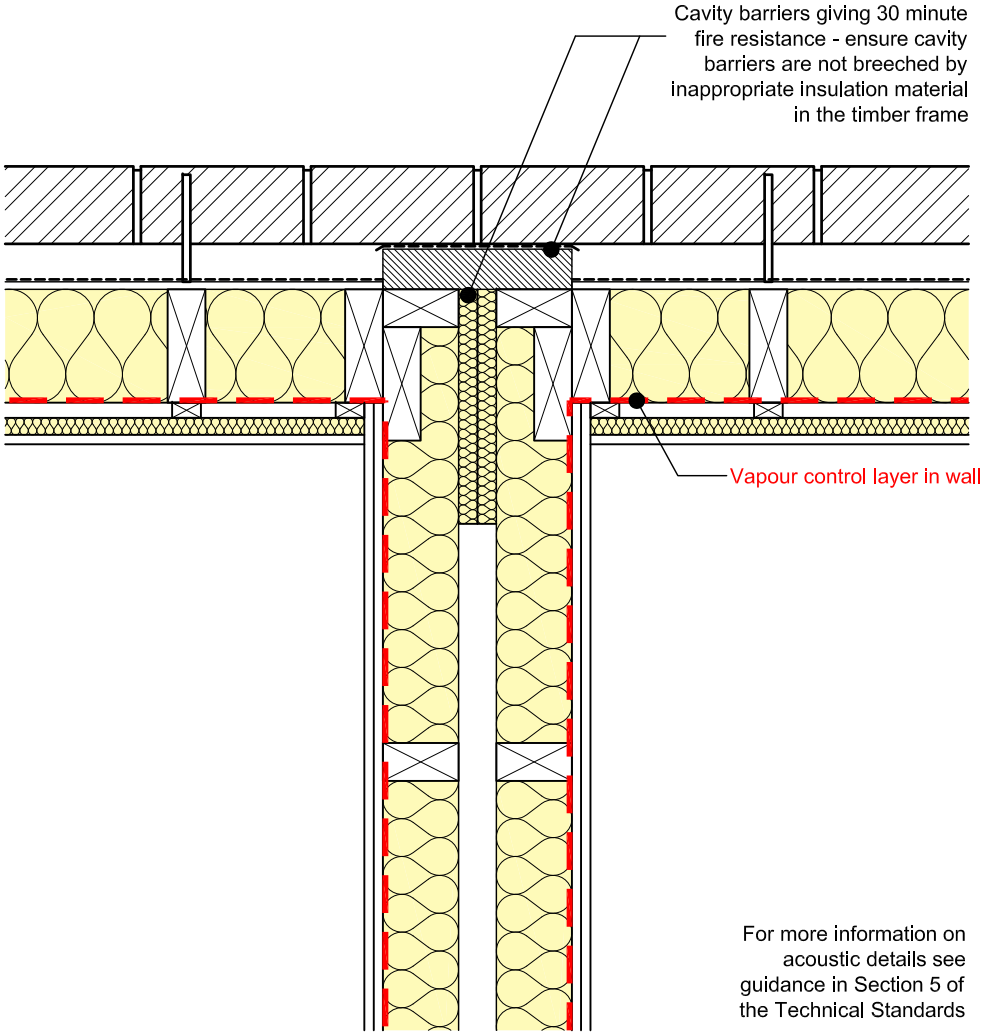

For more information on acoustic details see guidance in Section 5 of the Technical Standards

Plan view

This example should be read in conjunction with the guidance in the introduction to this document. It illustrates the reduction of unwanted infiltration in buildings and provides a Psi value for this junction situation which can be used in calculation provided the principles outlined and any identified component specification are followed.

Air tightness checklist

1. Check that any air tightness barrier used in the internal wall overlaps with the barrier in the external wall

Design advice

Minimising condensation risk

1. Check that insulation is fitted between timber studs at corner junctions

Thermal Resistance of insulation used in details:

Wall - 3.182 (m²K)/W
Insulated plasterboard - 1.591(m²K)/W
Internal wall - 2.045(m²K)/W

Psi value = 0.0725W/mK

Timber Frame Separating Wall

Detail 3.13

Thermal continuity checklist

1. Check that there is no debris in the cavity
2. Install cavity barrier in line with floor construction

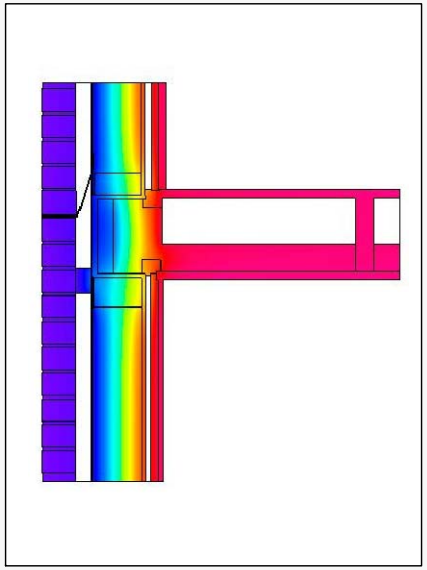

HEAT 2.7 software image of isotherms through junction detail.
For illustrative purposes only.

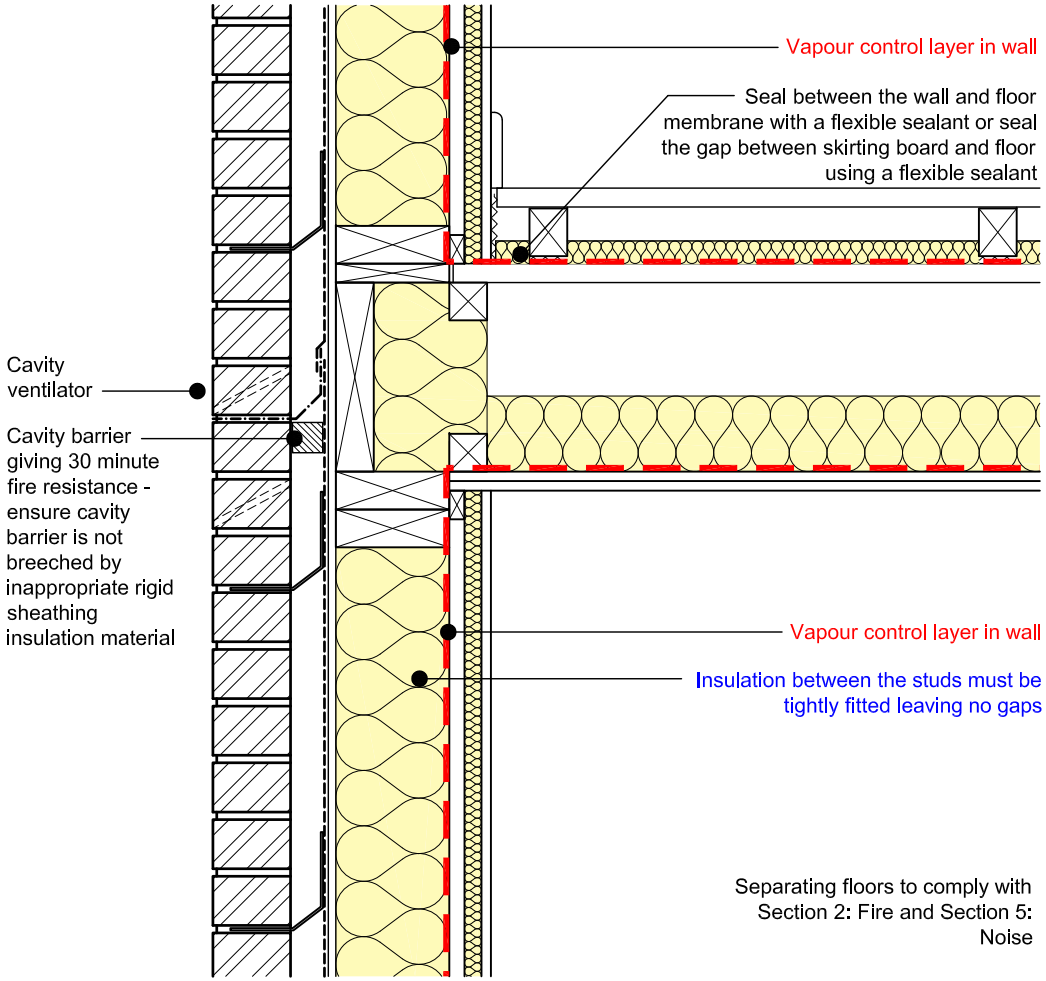

This example should be read in conjunction with the guidance in the introduction to this document. It illustrates the reduction of unwanted infiltration in buildings and provides a Psi value for this junction situation which can be used in calculation provided the principles outlined and any identified component specification are followed.

Air tightness checklist

1. Check that any air tightness barrier used in the external wall overlaps with the barrier in the floor

Design advice

Minimising condensation risk

1. Check that insulation is tightly fixed to the timber studs adjacent to the floor junction, leaving no gaps

Thermal Resistance of insulation used in details:

Wall - 3.182 (m²K)/W
Insulated plasterboard - 1.591(m²K)/W
Floor - 2.045(m²K)/W

Psi value = 0.0353W/mK

Timber Frame
Timber Separating Floor

Detail 3.14

Thermal continuity checklist

1. Check that there is no debris in the cavity
2. Install cavity barrier as necessary

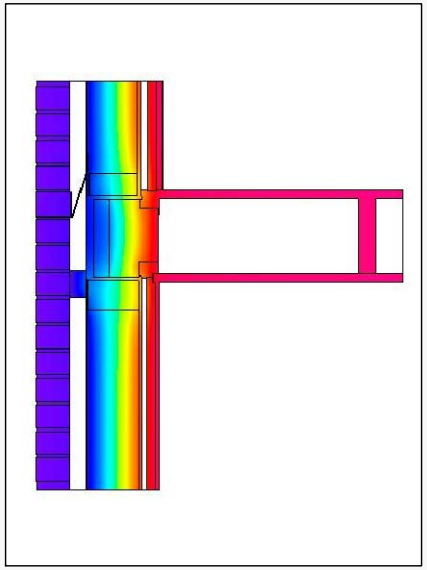

HEAT 2.7 software image of isotherms through junction detail.
For illustrative purposes only.

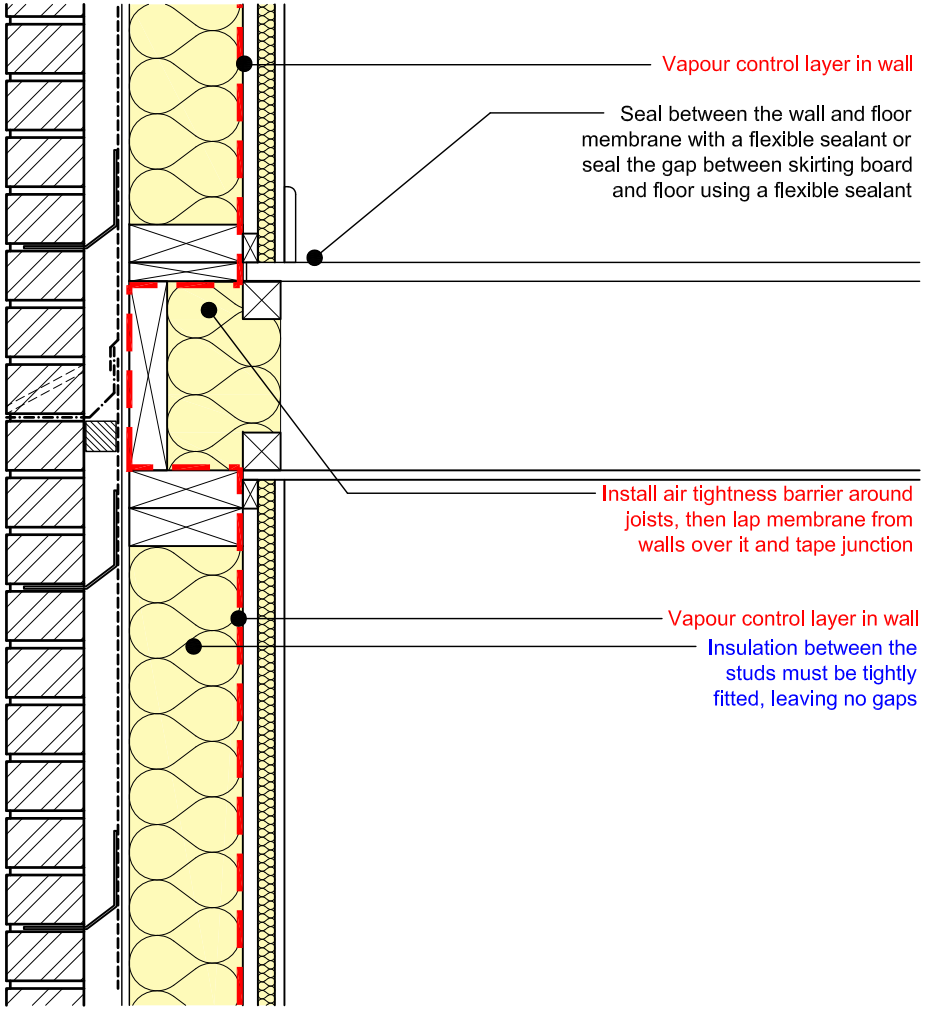

This example should be read in conjunction with the guidance in the introduction to this document. It illustrates the reduction of unwanted infiltration in buildings and provides a Psi value for this junction situation which can be used in calculation provided the principles outlined and any identified component specification are followed.

Air tightness checklist

1. Check that any air tightness barrier used in the external wall overlaps with the barrier in the floor

Design advice

Minimising condensation risk

1. Check that insulation is tightly fixed to the timber studs adjacent to the floor junction, leaving no gaps

Thermal Resistance of insulation used in details:

Wall - 3.182 (m²K)/W
Insulated plasterboard - 1.591(m²K)/W

Psi value = 0.0574W/mK

Timber Frame
Intermediate Floor / External Wall

Detail 3.15

Thermal continuity checklist

1. Ensure that insulation is tightly fitted between the timber floor joists
2. Install cavity barrier as necessary

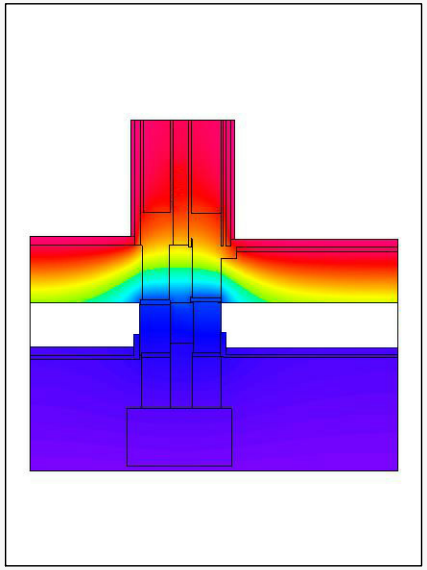

HEAT 2.7 software image of isotherms through junction detail.
For illustrative purposes only.

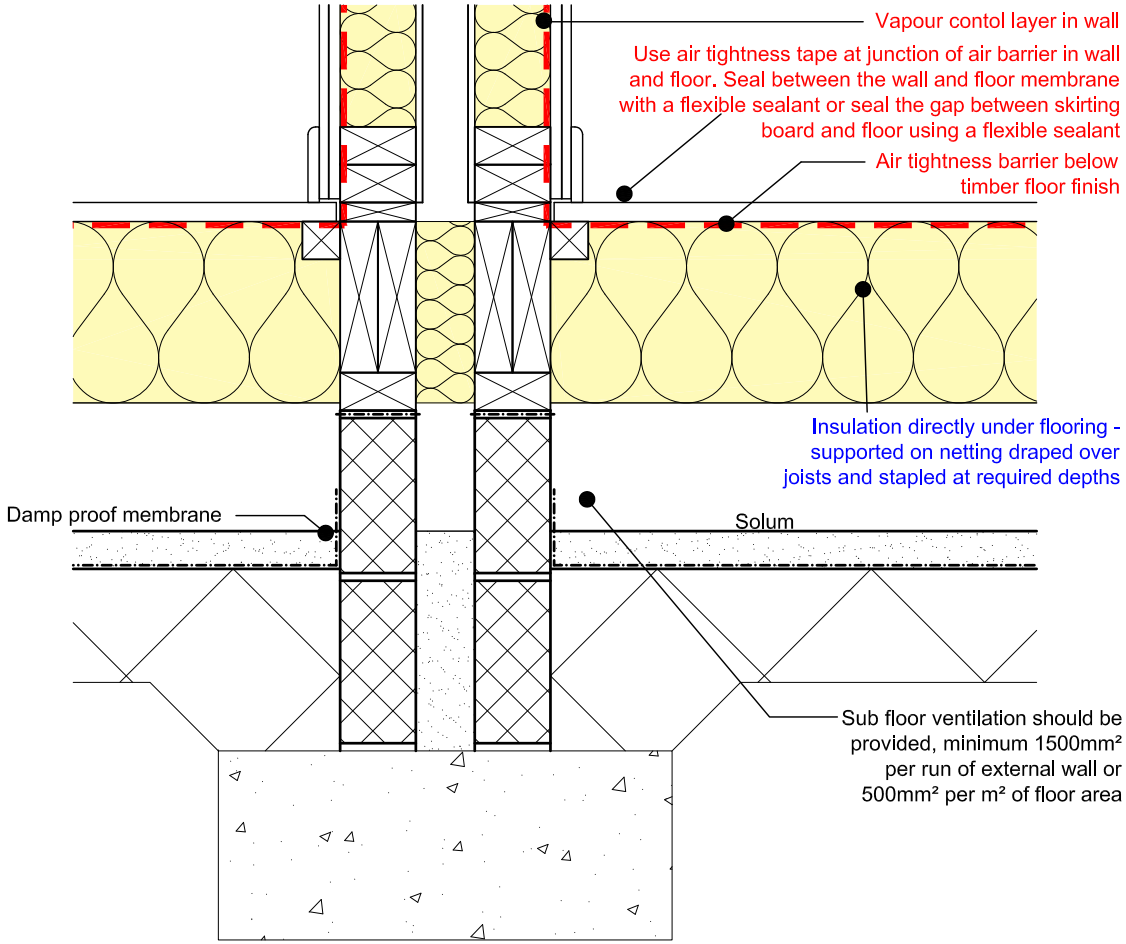

This example should be read in conjunction with the guidance in the introduction to this document. It illustrates the reduction of unwanted infiltration in buildings and provides a Psi value for this junction situation which can be used in calculation provided the principles outlined and any identified component specification are followed.

Air tightness checklist

1. Check that any air tightness barrier used in the internal wall overlaps with the barrier in the floor

Design advice

Minimising condensation risk

1. Check that all ventilation paths are clear before installing the floor insulation

Alternative Detail

2. Lightweight thermal blockwork can be used in the separating wall to improve the thermal performance but this will also reduce the acoustic performance of the wall. If this alternative is used then additional elements will be required to meet Section 5 of the Technical Standards.

Thermal Resistance of insulation used in details:

Internal Wall - 2.045 (m²K)/W
Floor - 5.455(m²K)/W

Psi value = 0.0713W/mK

Timber Frame
Ground Floor/Separating Wall Junction- timber suspended floor

Detail 3.16

Thermal continuity checklist

1. Ensure that insulation is tightly fitted against the separating floor

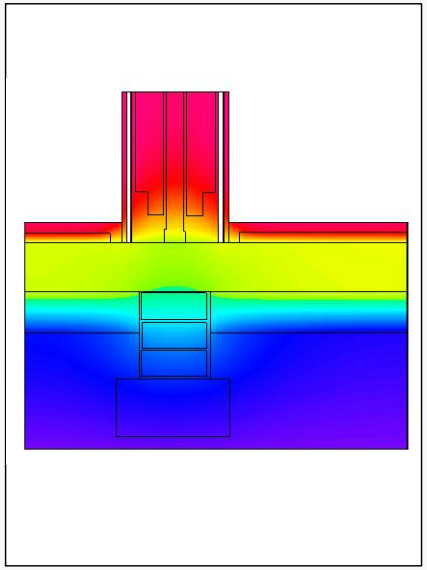

HEAT 2.7 software image of isotherms through junction detail.
For illustrative purposes only.

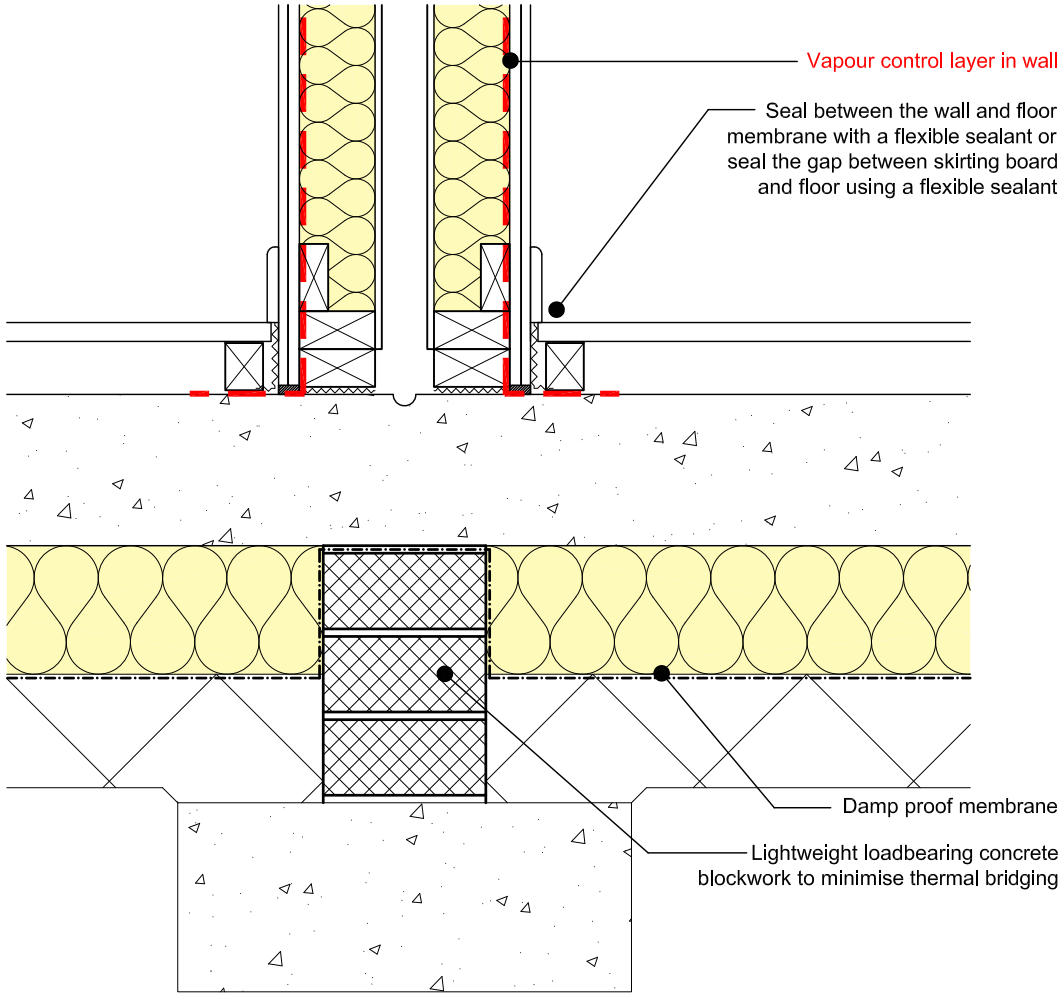

This example should be read in conjunction with the guidance in the introduction to this document. It illustrates the reduction of unwanted infiltration in buildings and provides a Psi value for this junction situation which can be used in calculation provided the principles outlined and any identified component specification are followed.

Air tightness checklist

1. Check that any air tightness barrier used in the internal wall overlaps onto the floor slab

Design advice

Minimising condensation risk

1. If a screed finish is used instead of a timber floor, use a strip of perimeter insulation with a minimum R value of 0.75 m²/KW for the depth of the screed

Alternative Detail

2. Heavyweight thermal blockwork can be used in the separating wall below slab level but this will reduce the thermal performance of this junction. Additional construction elements may be required along with lightweight blockwork in order to meet the acoustic requirements of Section 5 of the the Technical Standards

Thermal Resistance of insulation used in details:
Internal Wall - 2.045 (m²K)/W
Floor - 3.864(m²K)/W

Psi value = 0.2765W/mK

Timber Frame
Concrete Ground Floor/ Separating Wall: Insulation Below Slab

Detail 3.17

Thermal continuity checklist

1. Ensure that insulation is tightly fitted against the separating floor

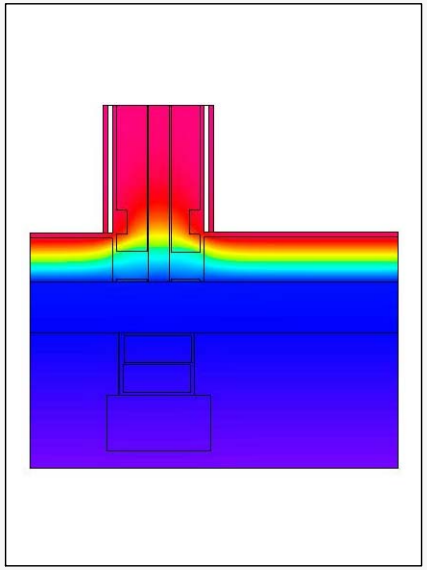

HEAT 2.7 software image of isotherms through junction detail.
For illustrative purposes only.

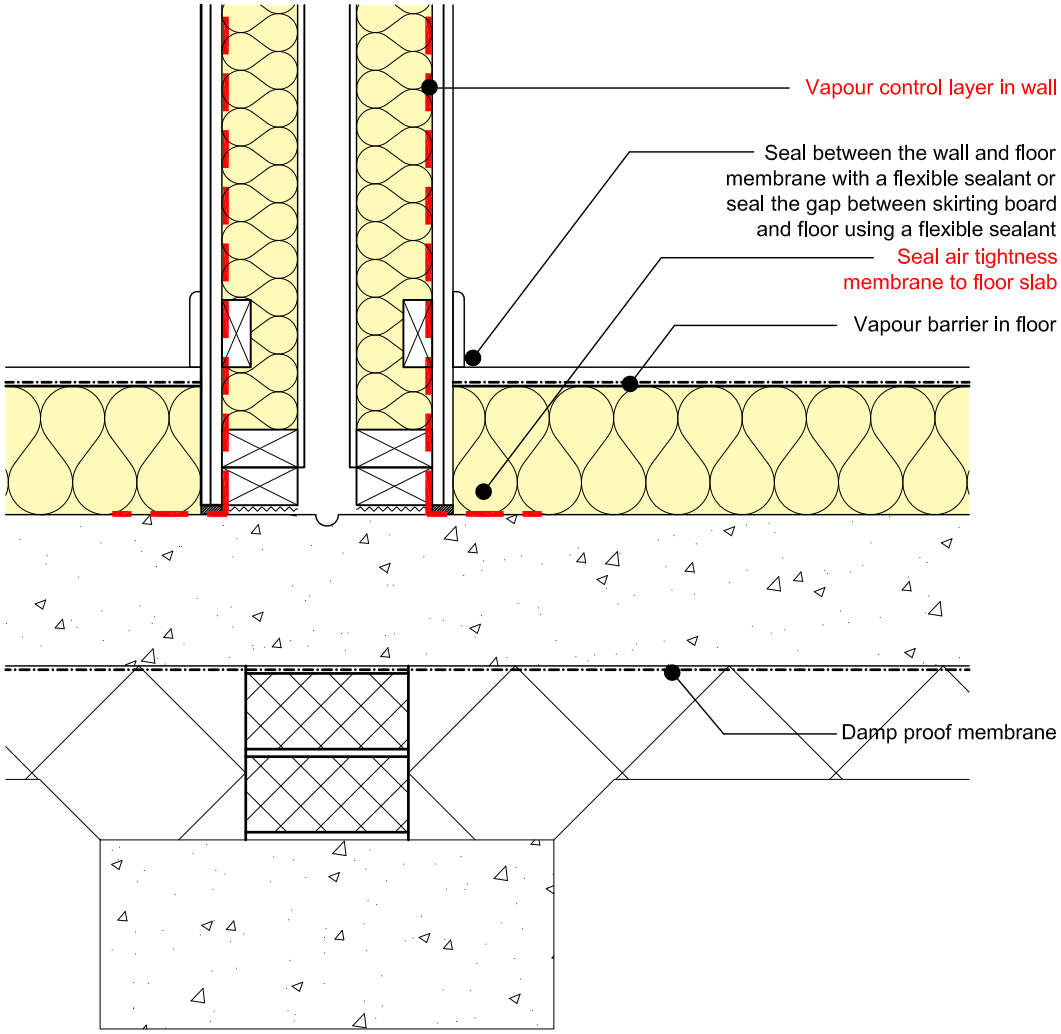

This example should be read in conjunction with the guidance in the introduction to this document. It illustrates the reduction of unwanted infiltration in buildings and provides a Psi value for this junction situation which can be used in calculation provided the principles outlined and any identified component specification are followed.

Air tightness checklist

1. Check that any air tightness barrier used in the internal wall overlaps onto the floor slab

Design advice

Minimising condensation risk

1. Check that concrete slab is level and clear of debris before fitting the insulation at floor level
2. If a screed finish is used instead of a timber floor, use a strip of perimeter insulation with a minimum R value of 0.75 m²/KW for the depth of the screed

Alternative Detail

3. Lightweight thermal blockwork can be used in the separating wall to improve the thermal performance but this will also reduce the acoustic performance of the wall. If this alternative is used then additional elements will be required to meet Section 5 of the Technical Standards.

Thermal Resistance of insulation used in details:
Internal Wall - 2.045 (m²K)/W
Floor - 3.864(m²K)/W

Psi value = 0.0146W/mK

Timber Frame
Concrete Ground Floor/ Separating Wall: Insulation Above Slab

Detail 3.18

Thermal continuity checklist

1. Ensure that insulation is tightly fitted

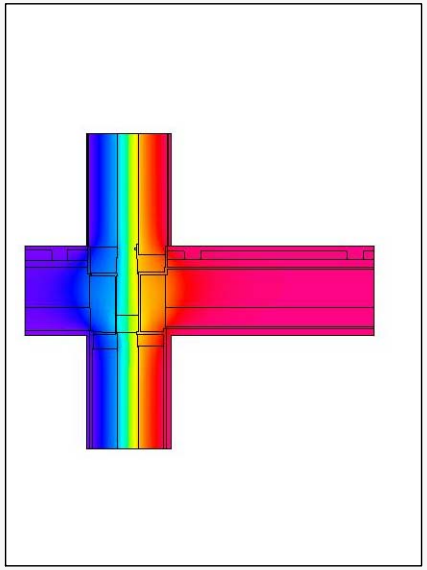

HEAT 2.7 software image of isotherms through junction detail.
For illustrative purposes only.

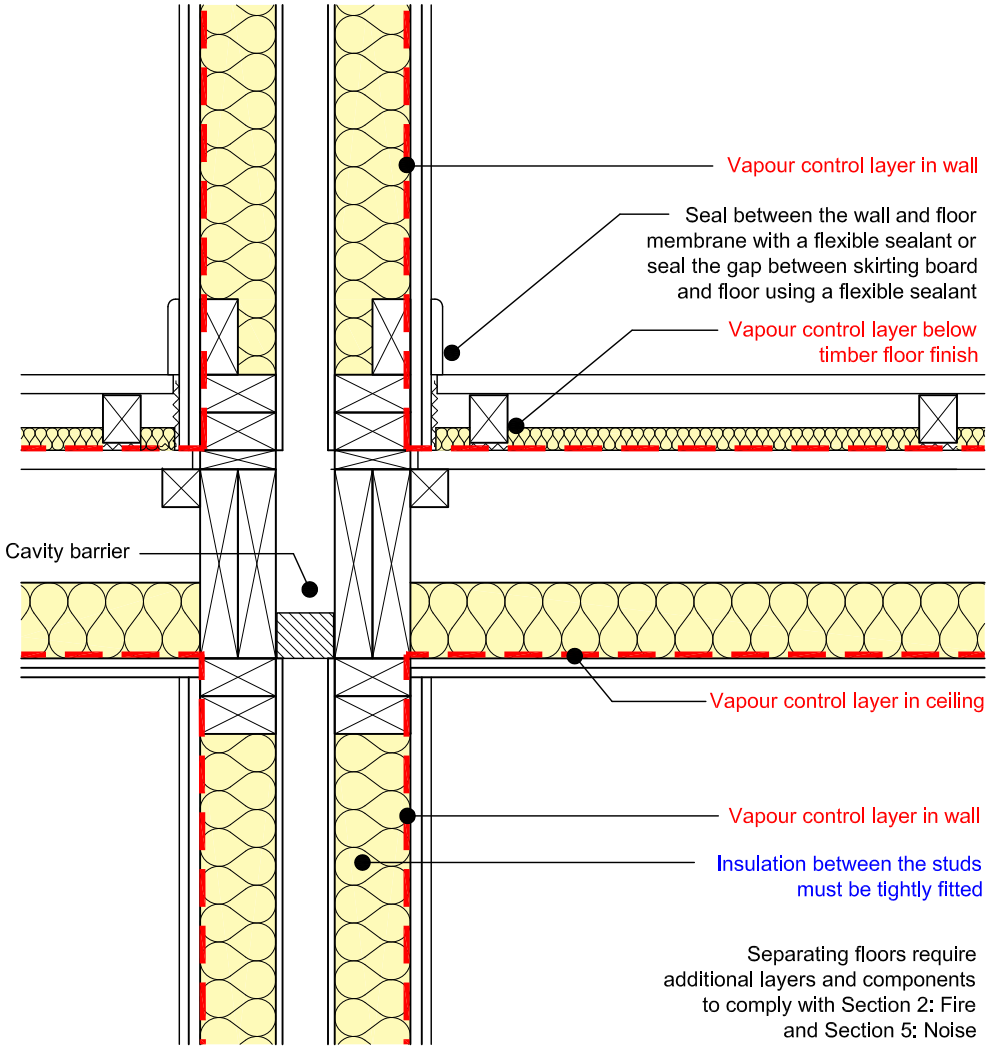

This example should be read in conjunction with the guidance in the introduction to this document. It illustrates the reduction of unwanted infiltration in buildings and provides a Psi value for this junction situation which can be used in calculation provided the principles outlined and any identified component specification are followed.

Air tightness checklist

1. Check that any air tightness barrier used in the internal wall overlaps with the barrier in the floor

Alternative:
Ensure that a continuous air tightness barrier from the wall wraps around the end of the floor construction, leaving no gaps

Design advice

Minimising condensation risk

See general guidance notes

Thermal Resistance of insulation used in details:
Internal Wall - 2.045 (m²K)/W
Floor - 2.045(m²K)/W

Psi value = 0.0241W/mK

Timber Frame
Separating Floor / Wall Junction

Detail 3.19

Thermal continuity checklist

1. Ensure that insulation is tightly fitted

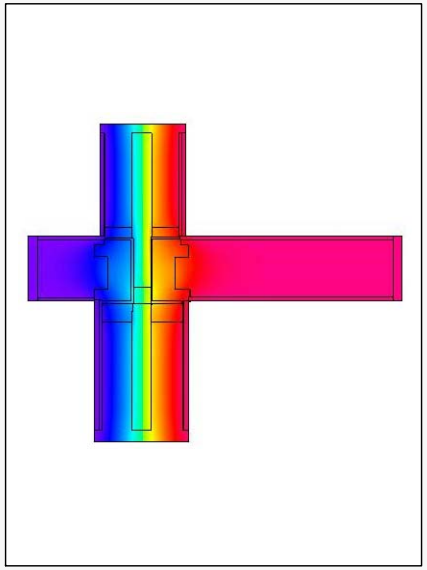

HEAT 2.7 software image of isotherms through junction detail.
For illustrative purposes only.

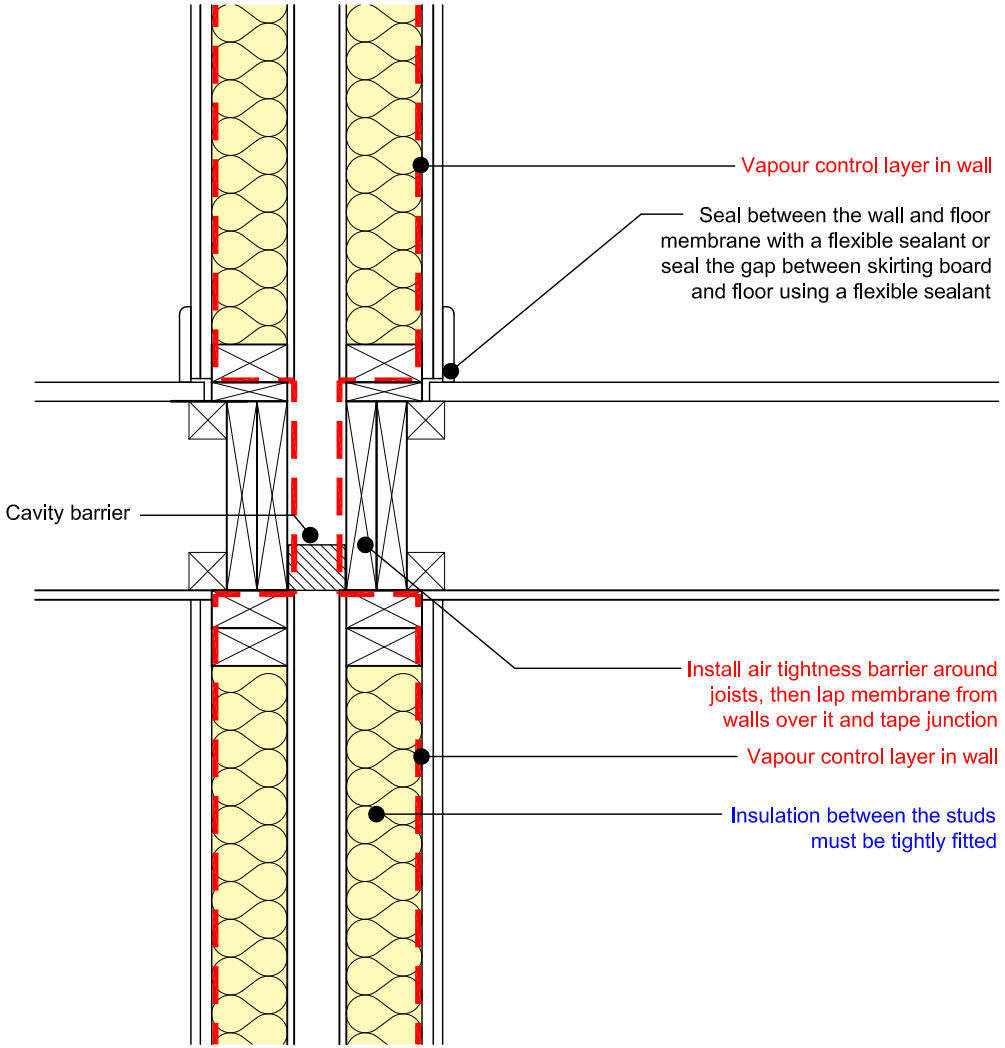

This example should be read in conjunction with the guidance in the introduction to this document. It illustrates the reduction of unwanted infiltration in buildings and provides a Psi value for this junction situation which can be used in calculation provided the principles outlined and any identified component specification are followed.

Air tightness checklist

1. Check that any air tightness barrier used in the internal wall overlaps with the barrier in the floor

Alternative:
Ensure that a continuous air tightness barrier from the wall wraps around the end of the floor construction, leaving no gaps

Design advice

Minimising condensation risks

See general guidance notes

Thermal Resistance of insulation used in details:
Internal Wall - 2.045 (m²K)/W

Psi value = 0.0333W/mK

Timber Frame
Intermediate Floor

Detail 3.20

Thermal continuity checklist

1. Install a cavity barrier at the top of the wall
2. Ensure that insulation layers in the roof are fitted perpendicularly, to cover junctions

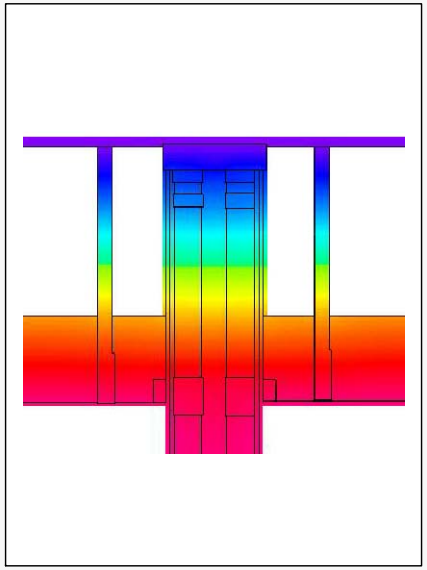

HEAT 2.7 software image of isotherms through junction detail.
For illustrative purposes only.

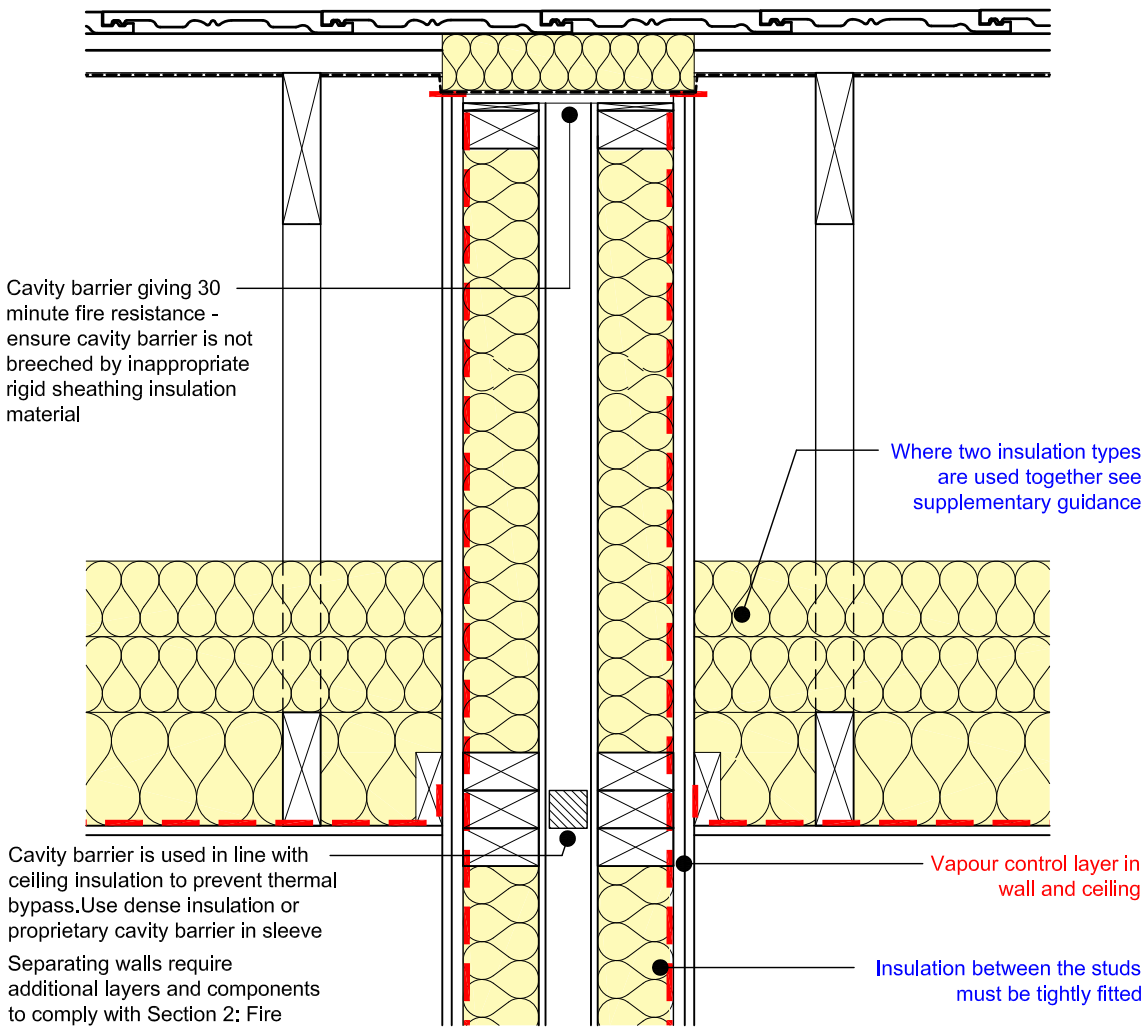

This example should be read in conjunction with the guidance in the introduction to this document. It illustrates the reduction of unwanted infiltration in buildings and provides a Psi value for this junction situation which can be used in calculation provided the principles outlined and any identified component specification are followed.

Air tightness checklist

1. Check that there are no gaps between the top of the masonry and the underside of the roof
2. Check that the air tightness barrier in the wall overlaps with the barrier in the ceiling

Design advice

Minimising condensation risk

1. Check ventilation paths are clear before installing insulation above the ceiling

Thermal Resistance of insulation used in details:
Internal Wall - 2.045 (m²K)/W
Roof - 9.500(m²K)/W

Note: See detail numbers 3.01 and 3.02 for other junctions using this roof construction

Psi value = 0.0132W/mK

Timber Frame
Pitched Roof: Cold Roof / Separating Wall junction

Detail 3.21

Thermal continuity checklist

1. Install a cavity barrier at the top of the wall
2. Ensure that insulation layers in the roof are fitted perpendicularly, to cover junctions

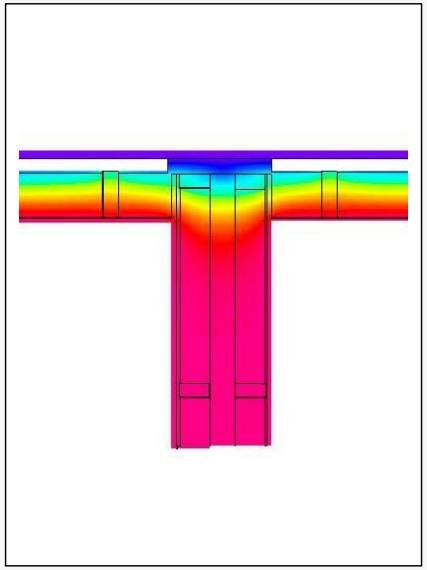

HEAT 2.7 software image of isotherms through junction detail.
For illustrative purposes only.

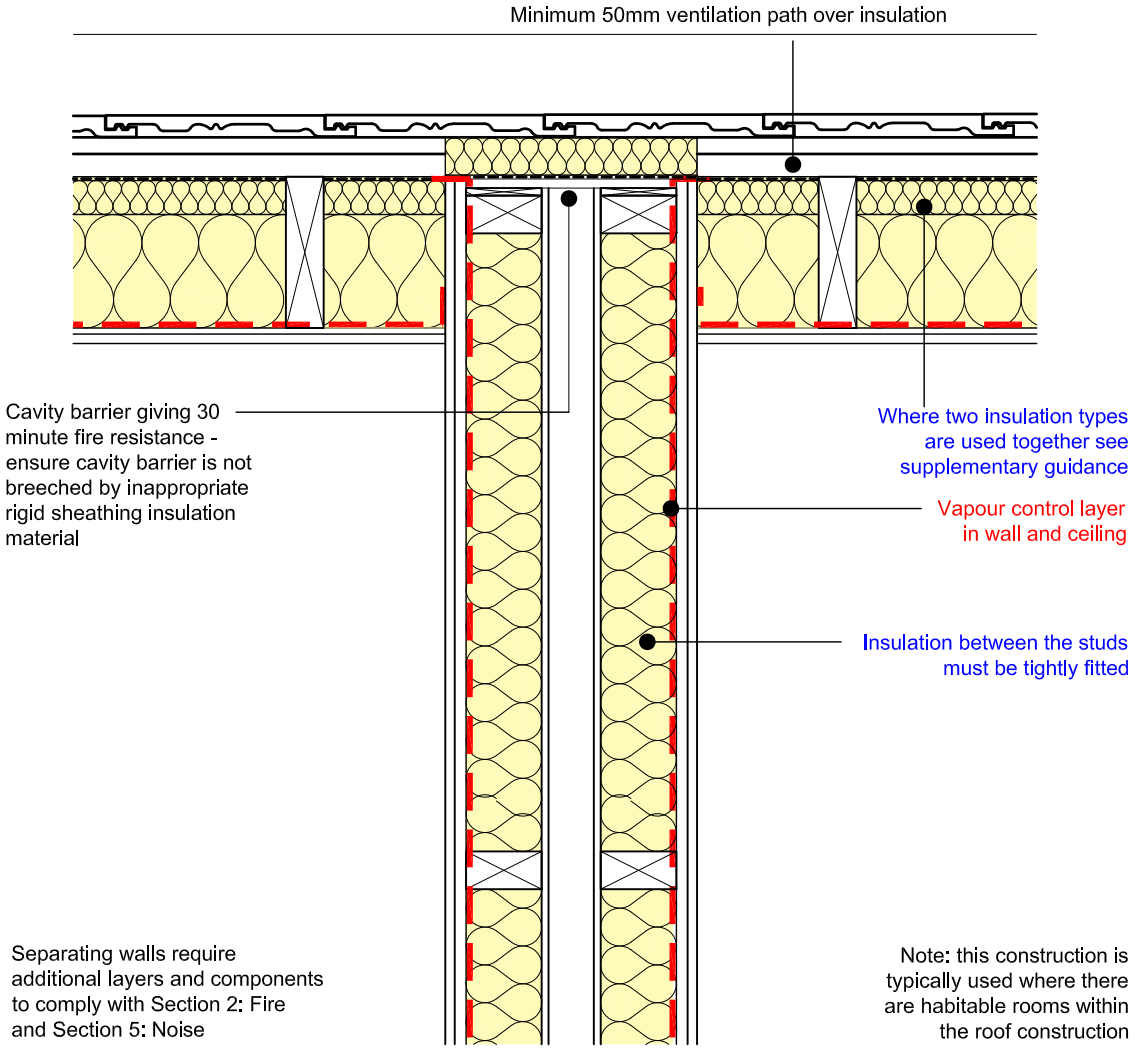

This example should be read in conjunction with the guidance in the introduction to this document. It illustrates the reduction of unwanted infiltration in buildings and provides a Psi value for this junction situation which can be used in calculation provided the principles outlined and any identified component specification are followed.

Air tightness checklist

1. Check that there are no gaps between the top of the masonry and the underside of the roof
2. Check that the air tightness barrier in the wall overlaps with the barrier in the ceiling

Design advice

Minimising condensation risk

1. Check ventilation paths are clear before installing insulation above the ceiling

Thermal Resistance of insulation used in details:
Internal Wall - 2.045 (m²K)/W
Roof - 9.500(m²K)/W

Note: See detail numbers 3.03, 3.04 and 3.05 for other junctions using this roof construction

Psi value = 0.0481W/mK

Timber Frame
Pitched Roof: Ventilated Batten Void / Separating Wall Junction

Detail 3.22

Thermal continuity checklist

1. Check that there is no debris in the cavity
2. Install cavity barrier

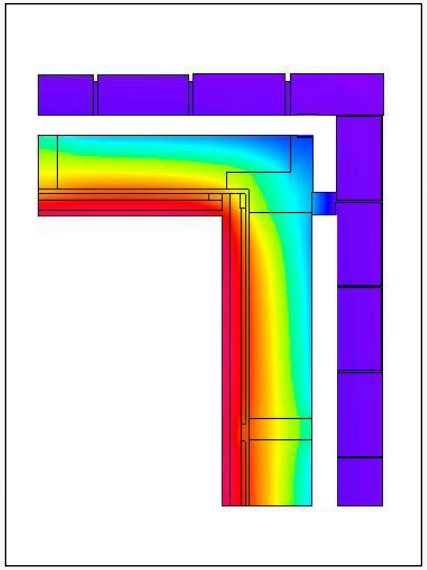

HEAT 2.7 software image of isotherms through junction detail.
For illustrative purposes only.

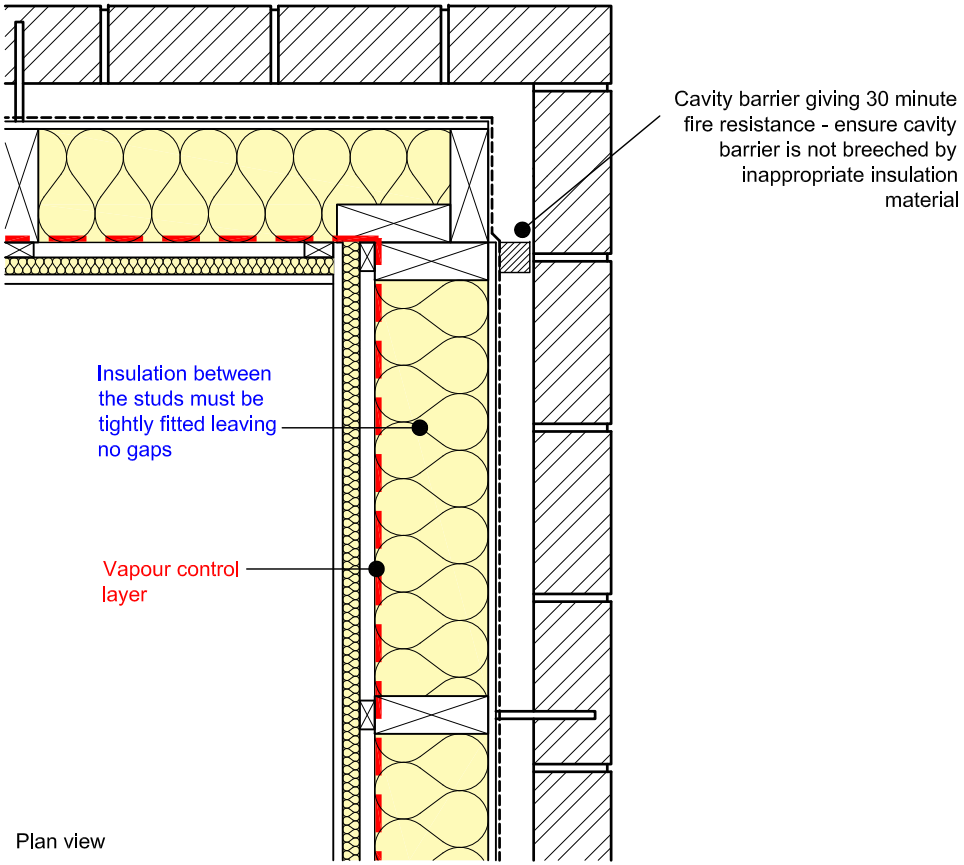

This example should be read in conjunction with the guidance in the introduction to this document. It illustrates the reduction of unwanted infiltration in buildings and provides a Psi value for this junction situation which can be used in calculation provided the principles outlined and any identified component specification are followed.

Air tightness checklist

1. Ensure that any air tightness barrier used in the external wall overlaps at the corner

Design advice

Minimising condensation risk

1. Check that insulation is tightly fixed to the timber studs at the corner junction, leaving no gaps

Thermal Resistance of insulation used in details:

Wall - 3.182 (m²K)/W
Insulated plasterboard - 1.591(m²K)/W

Psi value = 0.0179W/mK

Timber Frame Wall Junction

Detail 3.23

Thermal continuity checklist

1. Check that there is no debris in the cavity
2. Install cavity barrier

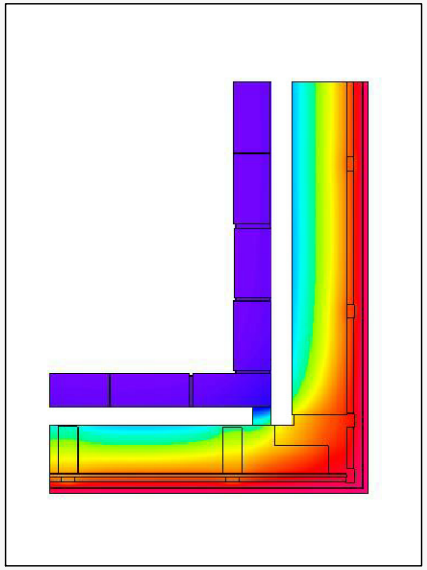

HEAT 2.7 software image of isotherms through junction detail.
For illustrative purposes only.

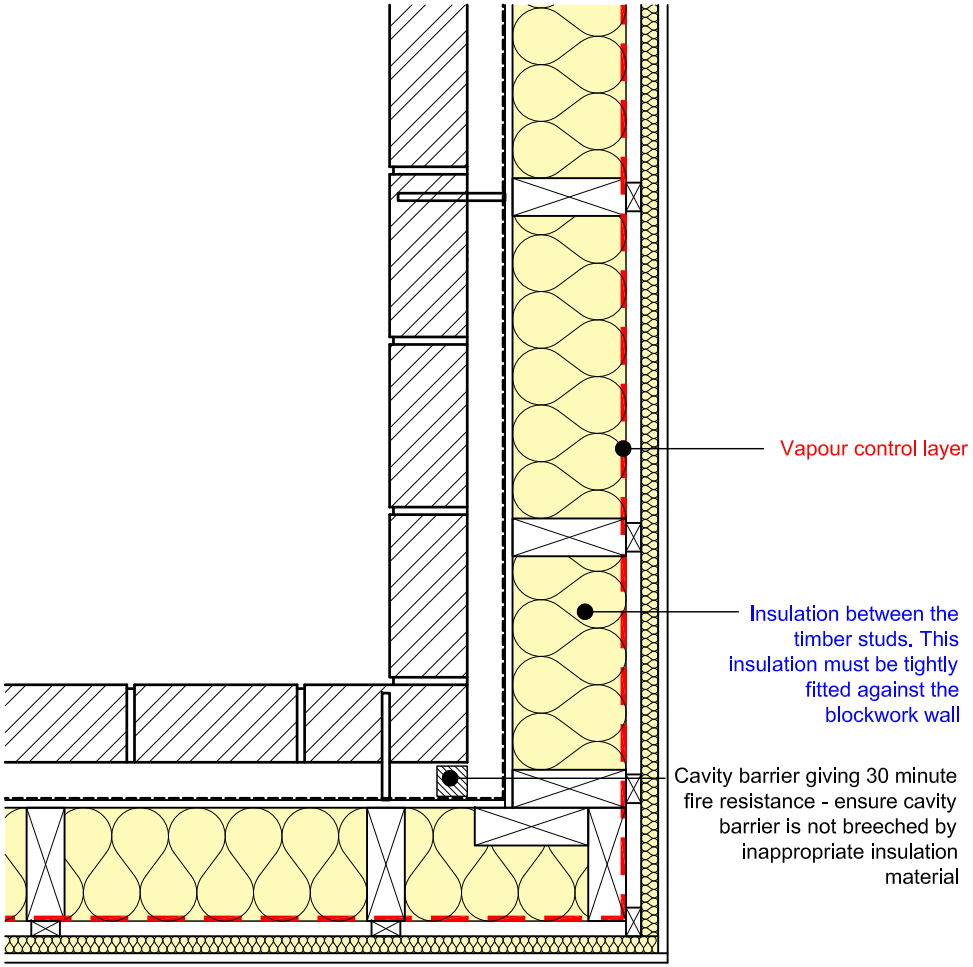

Plan view

This example should be read in conjunction with the guidance in the introduction to this document. It illustrates the reduction of unwanted infiltration in buildings and provides a Psi value for this junction situation which can be used in calculation provided the principles outlined and any identified component specification are followed.

Air tightness checklist

1. Ensure that any air tightness barrier used in the external wall overlaps at the corner

Design advice

Minimising condensation risk

1. Check that insulation is tightly fixed to the timber studs at the corner junction, leaving no gaps

Thermal Resistance of insulation used in details:

Wall - 3.182 (m²K)/W
Insulated plasterboard - 1.591(m²K)/W

Psi value = 0.0329W/mK

Timber Frame
Wall Junction - Inner

Detail 3.24